Ref. No.	Number Required for Type FK-																						Catalog Number	Description
	14.4-1000	14.4-1000-1	23-250	23-250-1	23-500	23-500-1	34.5-500	34.5-500-1	34.5-1000	34.5-1000-1	34.5-1500	34.5-1500-1	46-500	46-500-1	46-1500	46-1500-1	69-1000	69-1000-1, -2	69-1500	69-1500-1, -2	69-2500	69-2500-1, -2		
*1	6	6	6	6	6	6	-	-	-	-	-	-	-	-	-	-	-	-	-	-	-	-	7B522	Bushing
*1	-	-	-	-	-	-	6	6	6	6	6	6	-	-	-	-	-	-	-	-	-	-	7B532	Bushing
*1	-	-	-	-	-	-	-	-	-	-	-	-	6	6	6	6	-	-	-	-	-	-	7B542	Bushing
*1	-	-	-	-	-	-	-	-	-	-	-	-	-	-	-	-	6	6	6	6	6	6	7B562#	Bushing (standard) Type U
*1	-	-	-	-	-	-	-	-	-	-	-	-	-	-	-	-	6	6	6	6	6	6	7B717#	Bushing (high creepage) Type U
*2	12	12	12	12	12	12	12	12	12	12	12	12	-	-	-	-	-	-	-	-	-	-	177V561P15	Gasket for bushing adapter
*2	-	-	-	-	-	-	-	-	-	-	-	-	12	12	12	12	-	-	-	-	-	-	177V561P16	Gasket for bushing adapter
*2	-	-	-	-	-	-	-	-	-	-	-	-	-	-	-	-	12	12	12	12	12	12	177V561P17	Gasket for bushing adapter
§*3	3	3	3	3	3	3	3	3	3	3	3	3	3	3	3	3	3	3	3	3	3	3	6445751	Gasket for conduit box
*4	3	-	3	-	3	-	3	-	3	-	3	-	-	-	-	-	-	-	-	-	-	-	182V835P1 ⊥	Gasket for oil tank
*4	-	3	-	3	-	3	-	3	-	3	-	3	-	-	-	-	-	-	-	-	-	-	173A9024P1 ∧	Gasket for oil tank
*4	-	-	-	-	-	-	-	-	-	-	-	-	3	-	3	-	-	-	-	-	-	-	182V835P2 ⊥	Gasket for oil tank
*4	-	-	-	-	-	-	-	-	-	-	-	-	-	3	-	3	-	-	-	-	-	-	173A9024P2 ∧	Gasket for oil tank
*4	-	-	-	-	-	-	-	-	-	-	-	-	-	-	-	-	3	-	3	-	3	-	182V835P3 ⊥	Gasket for oil tank
*4	-	-	-	-	-	-	-	-	-	-	-	-	-	-	-	-	-	3	-	3	-	3	173A9024P3 ∧	Gasket for oil tank
*5	6	6	6	6	6	6	6	6	6	6	6	6	6	6	6	6	6	6	6	6	6	6	See page 4	Interrupter
*6	3	3	3	3	3	3	3	3	3	3	3	3	3	3	3	3	3	3	3	3	3	3	See page 6	Moving contact assembly
¶7	6	-	6	-	6	-	6	-	6	-	6	-	6	-	6	-	6	-	6	-	6	-	181V720	Grounding strip
¶8	6	-	6	-	6	-	6	-	6	-	6	-	6	-	6	-	6	-	6	-	6	-	181V717	Insulation bushing
¶9	6	-	6	-	6	-	6	-	6	-	6	-	-	-	-	-	-	-	-	-	-	-	181V718P1	Insulation gasket
¶9	-	-	-	-	-	-	-	-	-	-	-	-	6	-	6	-	-	-	-	-	-	-	181V718P2	Insulation gasket
¶9	-	-	-	-	-	-	-	-	-	-	-	-	-	-	-	-	6	-	6	-	6	-	181V718P3	Insulation gasket
10	6	6	6	6	6	6	6	6	6	6	6	6	6	6	6	6	6	6	6	6	6	6	6443177	Gasket for oil gage glass
11	3	3	3	3	3	3	3	3	3	3	3	3	3	3	3	3	3	3	3	3	3	3	6370470P20	Glass tube for oil gage
12	3	3	3	3	3	3	3	3	3	3	3	3	-	-	-	-	-	-	-	-	-	-	286B468G7	‡Oil gage float
12	-	-	-	-	-	-	-	-	-	-	-	-	3	3	3	3	-	-	-	-	-	-	286B468G5	‡Oil gage float
12	-	-	-	-	-	-	-	-	-	-	-	-	-	-	-	-	3	3	3	3	3	3	286B468G4	‡Oil gage float
*13	3	3	3	3	3	3	3	3	3	3	3	3	-	-	-	-	-	-	-	-	-	-	273B220G6	Lift rod guide
*13	-	-	-	-	-	-	-	-	-	-	-	-	3	3	3	3	-	-	-	-	-	-	273B220G5	Lift rod guide
*13	-	-	-	-	-	-	-	-	-	-	-	-	-	-	-	-	3	3	3	3	3	3	273B220G4	Lift rod guide
13A	3	3	3	3	3	3	3	3	3	3	3	3	3	3	3	3	3	3	3	3	3	3	†	Support
13B	9	9	9	9	9	9	9	9	9	9	9	9	9	9	9	9	9	9	9	9	9	9	103A2180P12	Stud
13C	18	18	18	18	18	18	18	18	18	18	18	18	18	18	18	18	18	18	18	18	18	18	6057434	Nut
13D	3	3	3	3	3	3	3	3	3	3	3	3	3	3	3	3	3	3	3	3	3	3	6413685P1	Guide
14	3	3	3	3	3	3	3	3	3	3	3	3	3	3	3	3	3	3	3	3	3	3	368A827P1	Drain valve (1 inch)
§15	3	-	3	-	3	-	3	-	3	-	3	-	3	-	3	-	3	-	3	-	3	-	183V933P1	Sampling device

\# These Type U bushings supersede Type LC bushings Cat. 15B72, 15B572 and 7B720 respectively.
* Recommended for normal maintenance (see page 8).
§ Not illustrated.
† Not sold separately.
⊥ Specify this catalog number for early design oil tanks with 3/8 in. slot and gasket shaped ◎ or ⌓ or ⌓.
∧ Specify this catalog number for later design oil tanks with 15/32 in. slot and gasket shaped ⌓ or ⌓ .
‡ Breakers shipped prior to September 1956, used a brass rod on the oil gage float; this brass rod is no longer supplied. The present design uses an aluminum rod of larger diameter. When used as a replacement for the brass rod, the aluminum rod will require enlarging the throat hole to 5/16 inch in accordance with drawing 437A913.
¶ Used on a few early design breakers.

TYPE FK OIL CIRCUIT BREAKER

Ref. No.	Number Required for Type FK-																						Catalog Number	Description
	14.4-1000	14.4-1000-1	23-250	23-250-1	23-500	23-500-1	34.5-500	34.5-500-1	34.5-1000	34.5-1000-1	34.5-1500	34.5-1500-1	46-500	46-500-1	46-1500	46-1500-1	69-1000	69-1000-1, -2	69-1500	69-1500-1, -2	69-2500	69-2500-1, -2		
*1	6	6	6	6	6	6	-	-	-	-	-	-	-	-	-	-	-	-	-	-	-	-	7B522	Bushing
*1	-	-	-	-	-	-	6	6	6	6	6	6	-	-	-	-	-	-	-	-	-	-	7B532	Bushing
*1	-	-	-	-	-	-	-	-	-	-	-	-	6	6	6	6	-	-	-	-	-	-	7B542	Bushing
*1	-	-	-	-	-	-	-	-	-	-	-	-	-	-	-	-	6	6	6	6	6	6	7B562#	Bushing (standard) Type U
*1	-	-	-	-	-	-	-	-	-	-	-	-	-	-	-	-	6	6	6	6	6	6	7B717#	Bushing (high creepage) Type U
*2	12	12	12	12	12	12	12	12	12	12	12	12	-	-	-	-	-	-	-	-	-	-	177V561P15	Gasket for bushing adapter
*2	-	-	-	-	-	-	-	-	-	-	-	-	12	12	12	12	-	-	-	-	-	-	177V561P16	Gasket for bushing adapter
*2	-	-	-	-	-	-	-	-	-	-	-	-	-	-	-	-	12	12	12	12	12	12	177V561P17	Gasket for bushing adapter
§*3	3	3	3	3	3	3	3	3	3	3	3	3	3	3	3	3	3	3	3	3	3	3	6445751	Gasket for conduit box
*4	3	-	3	-	3	-	3	-	3	-	3	-	-	-	-	-	-	-	-	-	-	-	182V835P1 ⊥	Gasket for oil tank
*4	-	3	-	3	-	3	-	3	-	3	-	3	-	-	-	-	-	-	-	-	-	-	173A9024P1 ∧	Gasket for oil tank
*4	-	-	-	-	-	-	-	-	-	-	-	-	3	-	3	-	-	-	-	-	-	-	182V835P2 ⊥	Gasket for oil tank
*4	-	-	-	-	-	-	-	-	-	-	-	-	-	3	-	3	-	-	-	-	-	-	173A9024P2 ∧	Gasket for oil tank
*4	-	-	-	-	-	-	-	-	-	-	-	-	-	-	-	-	3	-	3	-	3	-	182V835P3 ⊥	Gasket for oil tank
*4	-	-	-	-	-	-	-	-	-	-	-	-	-	-	-	-	-	3	-	3	-	3	173A9024P3 ∧	Gasket for oil tank
*5	6	6	6	6	6	6	6	6	6	6	6	6	6	6	6	6	6	6	6	6	6	6	See page 4	Interrupter
*6	3	3	3	3	3	3	3	3	3	3	3	3	3	3	3	3	3	3	3	3	3	3	See page 6	Moving contact assembly
¶7	6	-	6	-	6	-	6	-	6	-	6	-	6	-	6	-	6	-	6	-	6	-	181V720	Grounding strip
¶8	6	-	6	-	6	-	6	-	6	-	6	-	6	-	6	-	6	-	6	-	6	-	181V717	Insulation bushing
¶9	6	-	6	-	6	-	6	-	6	-	6	-	-	-	-	-	-	-	-	-	-	-	181V718P1	Insulation gasket
¶9	-	-	-	-	-	-	-	-	-	-	-	-	6	-	6	-	-	-	-	-	-	-	181V718P2	Insulation gasket
¶9	-	-	-	-	-	-	-	-	-	-	-	-	-	-	-	-	6	-	6	-	6	-	181V718P3	Insulation gasket
10	6	6	6	6	6	6	6	6	6	6	6	6	6	6	6	6	6	6	6	6	6	6	6443177	Gasket for oil gage glass
11	3	3	3	3	3	3	3	3	3	3	3	3	3	3	3	3	3	3	3	3	3	3	6370470P20	Glass tube for oil gage
12	3	3	3	3	3	3	3	3	3	3	3	3	-	-	-	-	-	-	-	-	-	-	286B468G7	‡Oil gage float
12	-	-	-	-	-	-	-	-	-	-	-	-	3	3	3	3	-	-	-	-	-	-	286B468G5	‡Oil gage float
12	-	-	-	-	-	-	-	-	-	-	-	-	-	-	-	-	3	3	3	3	3	3	286B468G4	‡Oil gage float
*13	3	3	3	3	3	3	3	3	3	3	3	3	-	-	-	-	-	-	-	-	-	-	273B220G6	Lift rod guide
*13	-	-	-	-	-	-	-	-	-	-	-	-	3	3	3	3	-	-	-	-	-	-	273B220G5	Lift rod guide
*13	-	-	-	-	-	-	-	-	-	-	-	-	-	-	-	-	3	3	3	3	3	3	273B220G4	Lift rod guide
13A	3	3	3	3	3	3	3	3	3	3	3	3	3	3	3	3	3	3	3	3	3	3	†	Support
13B	9	9	9	9	9	9	9	9	9	9	9	9	9	9	9	9	9	9	9	9	9	9	103A2180P12	Stud
13C	18	18	18	18	18	18	18	18	18	18	18	18	18	18	18	18	18	18	18	18	18	18	6057434	Nut
13D	3	3	3	3	3	3	3	3	3	3	3	3	3	3	3	3	3	3	3	3	3	3	6413685P1	Guide
14	3	3	3	3	3	3	3	3	3	3	3	3	3	3	3	3	3	3	3	3	3	3	368A827P1	Drain valve (1 inch)
§15	3	-	3	-	3	-	3	-	3	-	3	-	3	-	3	-	3	-	3	-	3	-	183V933P1	Sampling device

These Type U bushings supersede Type LC bushings Cat. 15B72, 15B572 and 7B720 respectively.
* Recommended for normal maintenance (see page 8).
§ Not illustrated.
† Not sold separately.
⊥ Specify this catalog number for early design oil tanks with 3/8 in. slot and gasket shaped ◎ or ⌓ or ⌓.
∧ Specify this catalog number for later design oil tanks with 15/32 in. slot and gasket shaped ⌓ or ⌓ .
‡ Breakers shipped prior to September 1956, used a brass rod on the oil gage float; this brass rod is no longer supplied. The present design uses an aluminum rod of larger diameter. When used as a replacement for the brass rod, the aluminum rod will require enlarging the throat hole to 5/16 inch in accordance with drawing 437A913.
¶ Used on a few early design breakers.

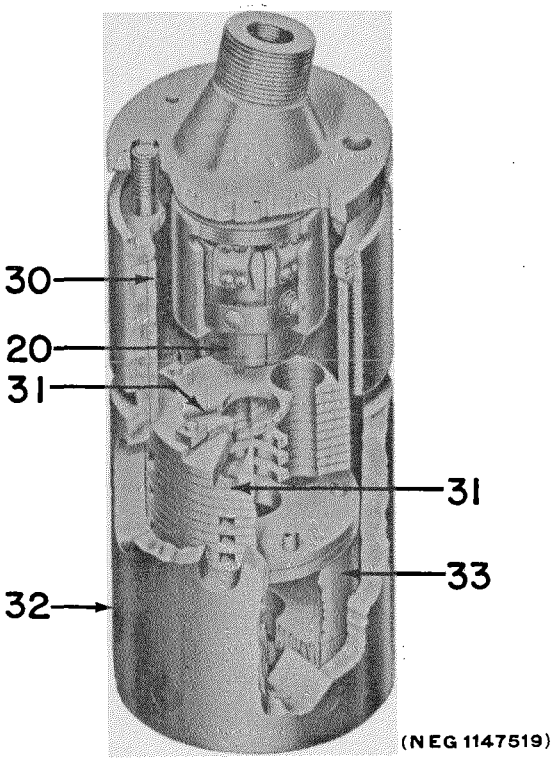

Fig. 2. Radial cross-blast interrupter, 14.4 kv thru 34.5 kv (Ref. 5)

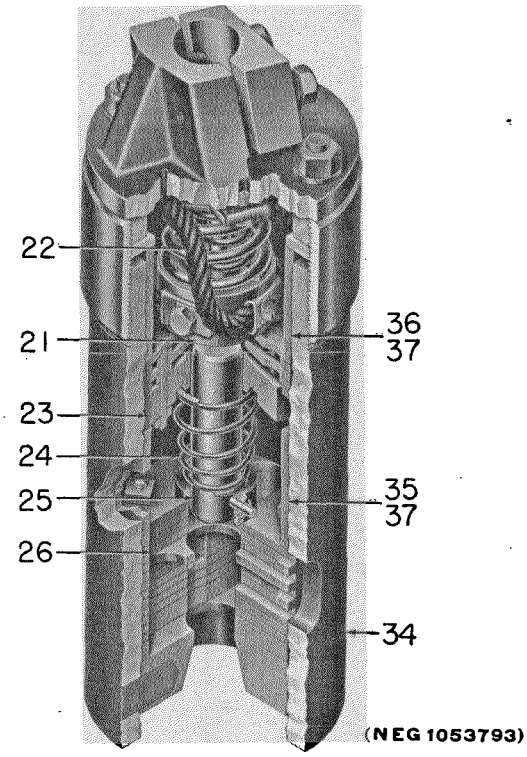

Fig. 3. Radial cross-blast interrupter, 46 kv thru 69 kv (Ref. 5)

Ref. No.	Number Required for Type FK-											Catalog Number	Description
	14.4-1000,-1	23-250,-1	23-500,-1	34.5-500,-1	34.5-1000,-1	34.5-1500,-1	46-500,-1	46-1500,-1	69-1000,-1,-2	69-1500,-1,-2	69-2500,-1,-2		
*5	6	-	6	-	6	6	-	-	-	-	-	175L885G2	Radial cross-blast interrupter
*5	-	6	-	6	-	-	-	-	-	-	-	175L885G1	Radial cross-blast interrupter
*5	-	-	-	-	-	-	6	-	-	-	-	175L885G3	Radial cross-blast interrupter
*5	-	-	-	-	-	-	-	6	-	-	-	175L885G4	Radial cross-blast interrupter
*5	-	-	-	-	-	-	-	-	6	-	-	175L885G5	Radial cross-blast interrupter
*5	-	-	-	-	-	-	-	-	-	6	-	175L885G6	Radial cross-blast interrupter
*5	-	-	-	-	-	-	-	-	-	-	6	175L885G7	Radial cross-blast interrupter
*20	6	6	6	6	6	6	-	-	-	-	-	See page 5	Rod contact segment assembly
*21	-	-	-	-	-	-	6	6	6	6	6	See page 5	Upper contact assembly
*22	-	-	-	-	-	-	24	24	24	24	24	6509077G11	Flexible lead
*23	-	-	-	-	-	-	6	6	6	6	-	103A5115G1	Upper baffle and contact guide
*23	-	-	-	-	-	-	-	-	-	-	6	103A5115G2	Upper baffle and contact guide
*24	-	-	-	-	-	-	6	6	6	6	6	6371350	Spring
*25	-	-	-	-	-	-	-	6	-	6	6	6509265AA	Intermediate contact rod and collar assembly
*25	-	-	-	-	-	-	6	-	6	-	-	6558514AA	Intermediate contact rod and collar assembly
*26	-	-	-	-	-	-	6	6	6	6	-	267C947G1	Lower baffle
*26	-	-	-	-	-	-	-	-	-	-	6	6557439G11	Lower baffle
30	6	6	6	6	6	6	-	-	-	-	-	175V340	Insulation tube
31	6	6	6	6	6	6	-	-	-	-	-	267C907G2	Baffle assembly
32	6	6	6	6	6	6	-	-	-	-	-	362A248G11	Outer tube assembly
33	6	6	6	6	6	6	-	-	-	-	-	362A249G11	Insulation tube
34	-	-	-	-	-	-	6	6	6	6	-	6557431G11	Outer tube and throat bushing
34	-	-	-	-	-	-	-	-	-	-	6	6557440G11	Outer tube and throat bushing
35	-	-	-	-	-	-	6	6	6	6	-	6371561P2	Tube
[illegible]	-	-	-	-	-	-	6	6	6	6	-	6371561P1	Tube
[illegible]	-	-	-	-	-	-	-	-	-	-	12	6371561P3	Tube

[illegible]d for normal maintenance (see page 8).

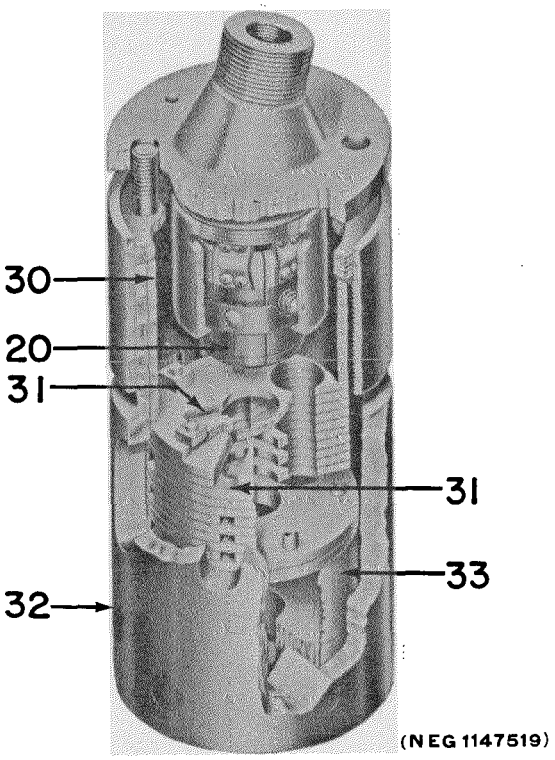

Fig. 2. Radial cross-blast interrupter, 14.4 kv thru 34.5 kv (Ref. 5)

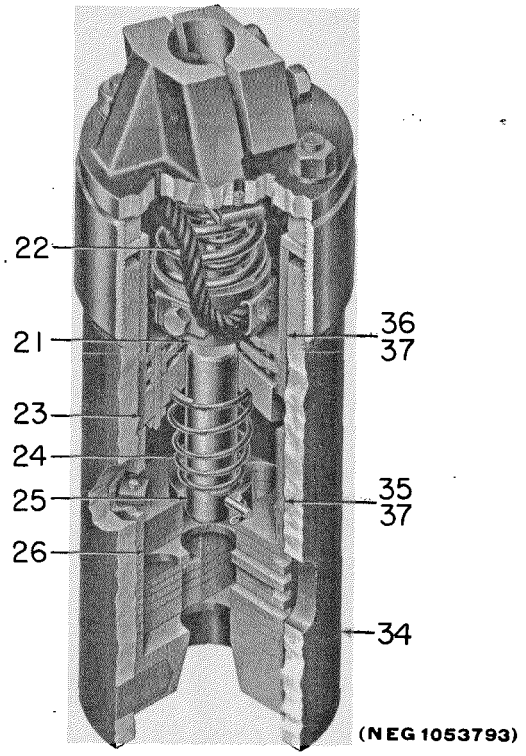

Fig. 3. Radial cross-blast interrupter, 46 kv thru 69 kv (Ref. 5)

Ref. No.	Number Required for Type FK-											Catalog Number	Description
	14.4-1000,-1	23-250,-1	23-500,-1	34.5-500,-1	34.5-1000,-1	34.5-1500,-1	46-500,-1	46-1500,-1	69-1000,-1,-2	69-1500,-1,-2	69-2500,-1,-2		
*5	6	-	6	-	6	6	-	-	-	-	-	175L885G2	Radial cross-blast interrupter
*5	-	6	-	6	-	-	-	-	-	-	-	175L885G1	Radial cross-blast interrupter
*5	-	-	-	-	-	-	6	-	-	-	-	175L885G3	Radial cross-blast interrupter
*5	-	-	-	-	-	-	-	6	-	-	-	175L885G4	Radial cross-blast interrupter
*5	-	-	-	-	-	-	-	-	6	-	-	175L885G5	Radial cross-blast interrupter
*5	-	-	-	-	-	-	-	-	-	6	-	175L885G6	Radial cross-blast interrupter
*5	-	-	-	-	-	-	-	-	-	-	6	175L885G7	Radial cross-blast interrupter
*20	6	6	6	6	6	6	-	-	-	-	-	See page 5	Rod contact segment assembly
*21	-	-	-	-	-	-	6	6	6	6	6	See page 5	Upper contact assembly
*22	-	-	-	-	-	-	24	24	24	24	24	6509077G11	Flexible lead
*23	-	-	-	-	-	-	6	6	6	6	-	103A5115G1	Upper baffle and contact guide
*23	-	-	-	-	-	-	-	-	-	-	6	103A5115G2	Upper baffle and contact guide
*24	-	-	-	-	-	-	6	6	6	6	6	6371350	Spring
*25	-	-	-	-	-	-	-	6	-	6	6	6509265AA	Intermediate contact rod and collar assembly
*25	-	-	-	-	-	-	6	-	6	-	-	6558514AA	Intermediate contact rod and collar assembly
*26	-	-	-	-	-	-	6	6	6	6	-	267C947G1	Lower baffle
*26	-	-	-	-	-	-	-	-	-	-	6	6557439G11	Lower baffle
30	6	6	6	6	6	6	-	-	-	-	-	175V340	Insulation tube
31	6	6	6	6	6	6	-	-	-	-	-	267C907G2	Baffle assembly
32	6	6	6	6	6	6	-	-	-	-	-	362A248G11	Outer tube assembly
33	6	6	6	6	6	6	-	-	-	-	-	362A249G11	Insulation tube
34	-	-	-	-	-	-	6	6	6	6	-	6557431G11	Outer tube and throat bushing
34	-	-	-	-	-	-	-	-	-	-	6	6557440G11	Outer tube and throat bushing
35	-	-	-	-	-	-	6	6	6	6	-	6371561P2	Tube
	-	-	-	-	-	-	6	6	6	6	-	6371561P1	Tube
		-	-	-	-	-	-	-	-	-	12	6371561P3	Tube

[illegible]d for normal maintenance (see page 8).