GE Industrial Systems

DC or AC — Drum and Disc Brakes

BRAKES

AISE and NEMA Rated—IC9528 600 Volts Max

WHERE TO USE

Use as holding, stopping, or retarding brake on cranes, hoists, conveyors, movable bridges, rolling-mill drives and other machinery. The brake responds quickly to prevent the load from drifting or coasting after power is cut off.

The IC9528 brake is a two-shoe, spring-set brake operating on a wheel mounted on the shaft of a motor or other machinery. When energized, a dc magnet picks up against spring pressure to effect release. When de-energized, the magnet drops out and the brake is set by the operating spring. The IC9528 brakes now incorporate non-asbestos brake linings.

IC9528 brakes meet AISE and NEMA standards for shoe brakes. They are designed for use in a 40 C ambient.

The C and E forms provide for additional torque capacity through increased lining area.

FEATURES

1. Single-end Adjustment

Simple adjustment for (A) lining wear, and (B) torque setting.

2. Enclosed Terminal Box

Totally enclosed conduit box for terminating coil leads.

3. Epoxy-encapsulated Coils

Dirt, moisture, and oil are sealed out.

4. Manual-release Mechanism

Permits removal of wheel or replacing brake linings without adjustment of torque setting.

5. Armature-gap Indicator

Clearly visible indicator shows when to adjust for lining wear.

6. High-strength Ductile-iron Wheel

Material chosen for high tensile strength and wear-resistant qualities. Wheel is removable vertically to speed motor servicing. By simply pivoting the tie rod on the 30-inch brake, the wheel can be removed vertically.

7. Non Asbestos Bonded Lining

No need to remove shoe assembly to replace lining. Simply utilize manual-release mechanism, remove lining-retaining bolts and slip lining out with screwdriver. Lining is non asbestos material bonded to steel backing.

8. Self-lubricated Bearings

Self-lubricated bearings with stainless steel pins.

9. Self-cleaning Armature (cut-away)

Cut-away design allows dirt to fall through rather than collect in armature gap.

9A. Self-cleaning Armature (top-pivot)

Top-pivot design allows dirt to fall through rather than collect in armature gap.

10. Shoe-clearance Locking

Positions pivot arm to provide positive shoe clearance.

11. Complete Magnet Interchangeability

The complete magnet housing with its coil is readily interchanged. Can be removed vertically if desired.

REFERENCES:

Instructions (100-105) GEH-3061
(A106) GEK-8081
Renewal Parts (100-105).....GEF-4022
Pads & Linings.....See page 1-5
Coils .....See page 1-5

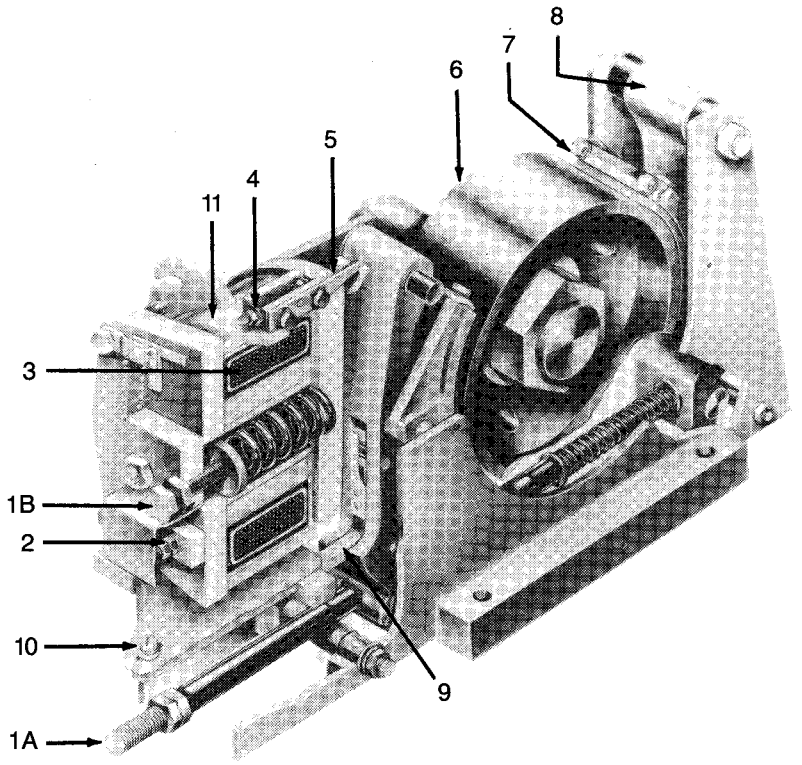

Fig. 1. Cutaway view of IC9528 magnetic brakes, wheel sizes 8 inches through 23 inches

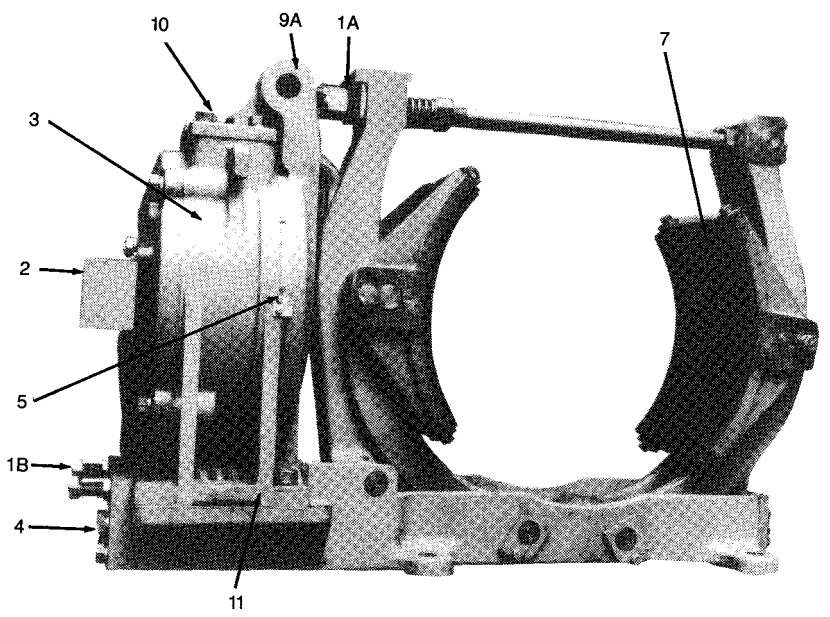

Fig. 2. IC9528 A106 magnetic brake 30-inch wheel size

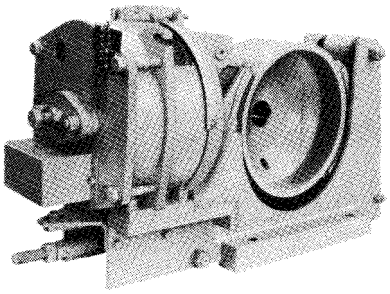

Fig. 3. IC9528A100-A105 brakes open type

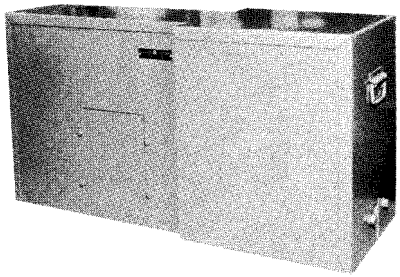

Fig. 4. IC9528 brake with GE TYPE 3 Driptight Enclosure

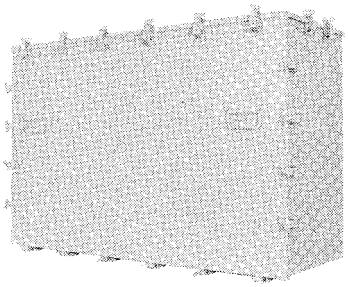

Fig. 5. IC9528 brake with GE TYPE 4 Watertight enclosure

TABLE 1—SIZES AND FORM—CAT NUMBER DOES NOT INCLUDE WHEEL***

Wheel Diam Inch	Torque Shunt Wound 60 min	Torque, Shunt Wound, Continuous	Basic Cat. No. IC9528	Open w/Non Corr Hdwe w/SS Pins	Driptight w/Non Corr Hdwe w/SS Pins	Watertight w/Non Corr Hdwe w/SS Pins
				Cat.	Cat.	Cat.
8	100	65	**A100. . . .**	**NC1**	**DC1**	**WT1**
10	200	150	**A101. . . .**	**NC1**	**DC1**	**WT1**
13	550	400	**A102. . . .**	**NC1**	**DC1**	**WT1**
16	1000	750	**A103. . . .**	**NC1**	**DC1**	**WT1**
19	2000	1500	**A104. . . .**	**NC1**	**DC1**	**WT1**
23	4000	3000	**A105. . . .**	**NC1**	**DC1**	**WT1**
30	9000	6750	****A106. . . .**	**K1**	**S1**	**WT1**
8	115	85	**C100. . . .**	**NC1**	**DC1**	**WT1**
10	235	175	**C101. . . .**	**NC1**	**DC1**	**WT1**
13	630	460	**C102. . . .**	**NC1**	**DC1**	**WT1**
16	1150	850	**C103. . . .**	**NC1**	**DC1**	**WT1**
19	2650	1500	**C104. . . .**	**NC1**	**DC1**	**WT1**
23	4800	3500	**C105. . . .**	**NC1**	**DC1**	**WT1**
8	100*	75	**D100. . . .**	**NC1**	**DC1**	**WT1**
10	200*	150	**D101. . . .**	**NC1**	**DC1**	**WT1**
13	550*	400	**D102. . . .**	**NC1**	**DC1**	**WT1**
16	1000*	750	**D103. . . .**	**NC1**	**DC1**	**WT1**
8	115*	85	**E100. . . .**	**NC1**	**DC1**	**WT1**
10	235*	175	**E101. . . .**	**NC1**	**DC1**	**WT1**
13	630*	460	**E102. . . .**	**NC1**	**DC1**	**WT1**
16	1150*	850	**E103. . . .**	**NC1**	**DC1**	**WT1**

* Self adjusting brake

** All steel pins used throughout on A106 form

***** Refer to page 1-7 and 1-8 of GEP-345D for standard wheel number and dimensions. Any wheel not listed on Table 6 page 1-7 is non-standard wheel.**

#Watertight enclosure prices are for end shield mated type enclosures or watertight enclosures with one shaft seal. End shield mated enclosures are used only with GE Type MD and CD motors. Specify right or left hand and motor type.

DC Brakes
Cat. Number
IC9528 A100 NC 1 AA

- A100 — Size
- NC — Encl (Table 1)
- 1 — Coil (see Note A)
- AA — Acces-sories (Table 2)

NOTE A-
Shunt coils, for 60 min torque rating, are cat form "1" such as "NC1". The older "3" coil designation, has been replaced with the "1" designation. Series coils, type "100-600" are price adders.

TABLE 2—ACCESSORIES FOR "NC1" AND "DC1" BRAKES

Wheel Diam. Inch	Cat. No. IC9528 Form A,C,D,E	Form						
		Open Or Driptight W/No Accessories	Open With Quick Release Handle	Open With Quick Release Handle & Lm Sw	Open With Limit Sw only	Driptight W/Limit Sw only	Series Resistor‡	
		Cat.	Cat	Cat.	Cat.	Cat.	60 Minute Cat #	Continuous w/o Forcing Cat #
8	**100. . . .**	**AA**	**AB**	**BH**	**BL**	**DL**	284A460	284A461
10	**101. . . .**	**AA**	**AB**	**BH**	**BL**	**DL**	284A468	284A470
13	**102. . . .**	**AA**	**AB**	**BH**	**BL**	**DL**	284A450	284A451
16	**103. . . .**	**AA**	**AB**	**BH**	**BL**	**DL**	284A464	284A465
19	**104. . .**	**AA**	**AB**	**BH**	**BL**	**DL**	284A456	284A457
23	**105. . . .**	**AA**	**AB**	**BH**	**BL**	**DL**	285A791	285A792
30	**106. . . .**	**AA**	**NA**	**N/A**	**N/A**	**N/A**	N/A	

‡ For separate mounting. Resistor has connections for 115, 125, 230 and 250 volts.

TABLE 3—IC7483 RECTIFIER PANEL

For operation of dc brake on ac power. Panel contains necessary transformer, rectifier, relays, resistor and forcing contactor. Brakes for continuous operation will be rated on a forcing-contactor basis when rectifier panel is used. Specify voltage (230, 460 or 575 volts) and frequency (50 or 60 Hertz)

Shunt Rectifier Panel, GE Type 1 Enclosure (select catalog number from page 1-6) .....

Shunt Rectifier Panel, GE Type 4 Enclosure (select catalog number from page 1-6).....

BRAKES

Type IC9528

APPLICATION

Wheels

GE supplies standard brake wheels machined from ductile-iron castings.

Evaluation has shown that they are essentially equivalent to tool-steel wheels in quality and performance, yet considerably less expensive. For application requiring tool-steel wheels, select proper brake and order tool-steel wheel from appropriate vendor.

Selection of Rating

The torque rating required in a brake will normally be equal to the motor full-load torque, and brakes for most applications can be selected on this basis. If the motor full-load torque is not known, it can be determined from the following formula:

$$\text{Torque in lb-ft} = \frac{5250 \times \text{hp}}{\text{Full-load rpm}}$$

Torque Adjustment

Torque can be adjusted over a range of 100- to 25-percent rated torque to give operating characteristics desired in a specific installation.

Pickup and Dropout

Series brakes are designed to pick up (release brake) at 40-percent motor full-load current or less and dropout (set brake) at 10-percent motor full-load current or less. The low dropout point keeps the brake from resetting on light motor loads.

Shunt brakes are designed to pick up at 80 percent or less of rated voltage and will operate satisfactorily at 110-percent rated voltage.

Connections—Series Brakes

Connect series brakes as shown in Fig. 6.

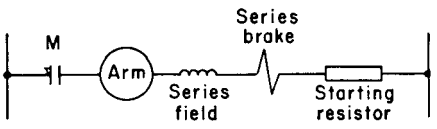

Fig. 6. Connection for series brake

Connections—Shunt Brakes

Shunt brakes are furnished with partial-voltage operating coils to give good speed of response. The partial-voltage coil in circuit with a series resistor reduces the ratio of inductance to total impedance and gives a faster pickup than would occur with a full-voltage coil alone. The partial-voltage coil can also be "forced" for even faster response by the application of full voltage for pickup and then the insertion of a series resistor for holding.

The simplest connection for a shunt brake is one in which the brake is energized by the same contactor or contactors that start the motor. It is important that both sides of the motor line be broken (see Fig. 7) to prevent delay in brake setting due to counter emf of the motor (or not setting at all as might occur with an overhauling load).

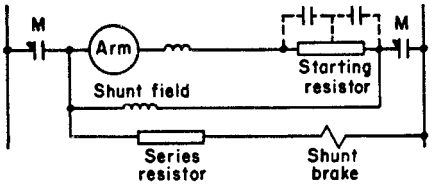

Fig. 7. Brake energized by motor contactor

The most flexible connection for a shunt brake is one in which a separate two-pole brake contactor is used as shown in Fig. 8. With this connection the counter emf of the motor cannot delay brake setting and the brake can be controlled by an interlock on the motor contactor, by a separate pilot device or both.

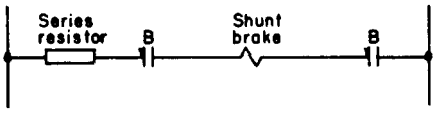

Fig. 8. Use of brake contactor

The connection illustrated in Fig. 6 is one in which the series resistor is always in circuit with the brake coil. A "forcing" connection on the other hand is one in which an additional contactor is used to short out the series resistor during pickup. Such a connection is illustrated by Fig. 9. The normally closed contactor (BF) picks up only after a predetermined value of current (sufficient for pickup) is flowing through the brake coil. After pickup, contactor (BF) opens to place the holding resistor in the circuit.

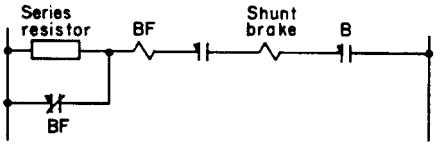

Fig. 9. Forcing connection for fast release

In practice, the series resistor used for holding only is selected to limit coil current to a lower value than would be possible when the resistor is in circuit during pickup. An example of the two types of operation is illustrated in Fig. 10. The difference in pickup time is also indicated.

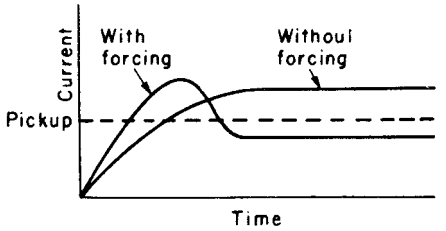

Fig. 10. Typical time-current curves with and without forcing

In some applications, such as in the travel motion of a heavy bridge crane, it may be desirable to slow down speed of brake setting to provide smooth stopping. This can be done by connecting a discharge resistor across the brake coil as shown in Fig. 11. When the brake contactor then drops out, the brake-coil flux decays gradually and the brake sets more slowly.

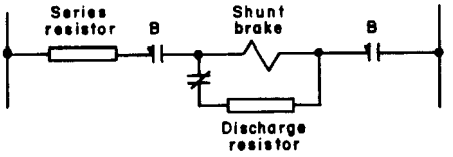

Fig. 11. Connection on discharge resistor

Average brake pickup times, average dropout times and rated coil currents are shown in Table 4, page 1-5.

Choose brake contactors for the no-discharge-resistor connection on the basis of two poles in series with blowout ratings three or four times rated coil current. Recommended *GE* contactors are listed in Table 5, page 1-5.

The series resistors for IC9528 brakes will be provided in the equipment control panel if furnished by GE. They will be supplied separately for purchaser installation if specified.

Mounting

Brakes designated for floor mounting can be mounted on any horizontal surface: floor or ceiling. Brake magnet can be positioned on right or left of motor shaft.

For allowable centerline deviations refer to Company.

Type IC9528 — 600 Volts Max

HOW TO ORDER

A. BRAKE-Order by complete catalog number plus suffixes obtained from Tables 1, & 2 on page 1-3. (Example: IC9528A100NC1AA) If series coil required, order "similar to. . ." except specify series coil and furnish full load amps and 30 or 60 minute.

B. WHEEL-Specify wheel to be bored for (motor shaft extension) (other shaft) having dimensions shown on drawing enclosed. Also see Fig. 6. page 1-11.

-or-

Specify existing catalog # stamped on rim of wheel. See page 1-7, 1-8.

C. AC RECTIFIER PANEL-Order IC7483 by description indicating brake size, voltage, cycles, and type enclosure. See page 1-6 for standard catalog numbers.

D. SERIES RESISTOR (For shunt wound brake)-Specify catalog number. See Table 2, page 1-3.

TABLE 4—DATA—SHUNT BRAKES—250 VOLTS DC

IC9528 Form A, C, D or E	Brake Coil Ohms		60-min-rated Brakes				Continuous-rated Brakes							
							Without Forcing				With Forcing			
	Cold	Hot	Series Resistor Ohms ‡	Holding Current Amp	Pickup Time (Release) Sec	Dropout Time (Set) Sec	Series Resistor Ohms ‡	Holding Current Amp	Pickup Time (Release) Sec	Dropout Time (Set) Sec	Series Resistor Ohms ‡	Holding Current Amp	Pickup Time (Release) Sec	Dropout Time (Set) Sec
100	16.2	21.5	60	3.1	0.15	0.08	92	2.2	0.15	0.08	103	2.0	0.10	0.06
101	9.2	12.2	43	4.6	0.17	0.10	66	3.2	0.17	0.10	71	3.0	0.11	0.08
102	7.9	9.9	30	6.3	0.21	0.11	50	4.3	0.21	0.11	50	4.3	0.14	0.11
103	4.48	6.4	22	8.8	0.25	0.14	39	5.6	0.25	0.14	43	5.0	0.17	0.12
104	3.55	4.92	17.8	11.0	0.45	0.20	29	7.4	0.45	0.20	31	7.0	0.30	0.18
105	3.27	4.53	13.7	13.8	0.60	0.30	24	8.8	0.60	0.30	27	8.0	0.40	0.27
106*	2.48	3.43	8.8	20.5	0.68	0.40	15.5	13.2	0.77	0.40	18	11.6	0.50	0.36

*A Form only.
‡NOT included in basic price. See ACCESSORIES—page 1-3.

TABLE 5—RECOMMENDED CONTACTORS

IC9528 Form A, C, D or E	Volts Dc	Contactors								
		DS303 Form	Blowout Amp	For Continuous-rated Brakes						
				Without Forcing		With Forcing				
						Brake Contactor		Forcing Contactor		
				DS303 Form	Blowout Amp	DS303 Form	Blowout Amp	DS303 Form	Min Holding Amp	Blowout Amp
100	115	**A2C01DXA003**	10	**A2C01DXA003**	10	**A2C01DXA003**	10	**A1B01XDA071**	1.8	10
	230	**A2C01DXA002**	10	**A2C01DXA002**	10	**A2C01DXA002**	10	**A1B01XDA071**	1.8	10
	550	**A2C01DXA005**	10	**A2C01DXA005**	10	**A2C01DXA005**	10	**A1B01XDA071**	1.8	10
101	115	**A2C01EXA003**	25	**A2C01DXA003**	10	**A2C01DXA003**	10	**A1B01XDA072**	2.7	10
	230	**A2C01EXA002**	25	**A2C01DXA002**	10	**A2C01DXA002**	10	**A1B01XDA072**	2.7	10
	550	**A2C01EXA005**	25	**A2C01DXA005**	10	**A2C01DXA005**	10	**A1B01XDA072**	2.7	10
102	115	**A2C01EXA003**	25	**A2C01EXA003**	25	**A2C01DXA003**	10	**A1B01XDA076**	4.3	10
	230	**A2C01EXA002**	25	**A2C01EXA002**	25	**A2C01DXA002**	10	**A1B01XDA076**	4.3	10
	550	**A2C01EXA005**	25	**A2C01EXA005**	25	**A2C01DXA005**	10	**A1B01XDA076**	4.3	10
103	115	**A2C01EXA003**	25	**A2C01EXA003**	25	**A2C01DXA003**	10	**A1B01XDA075**	4.9	10
	230	**A2C01EXA002**	25	**A2C01EXA002**	25	**A2C01DXA002**	10	**A1B01XDA075**	4.9	10
	550	**A2C01EXA005**	25	**A2C01EXA005**	25	**A2C01DXA005**	10	**A1B01XDA075**	4.9	10
104	115	**A2C01EXA003**	25	**A2C01EXA003**	25	**A2C01DXA003**	10	**A1B01XEA077**	6.3	25
	230	**A2C01EXA002**	25	**A2C01EXA002**	25	**A2C01DXA002**	10	**A1B01XEA077**	6.3	25
	550	**A2C01EXA005**	25	**A2C01EXA005**	25	**A2C01DXA005**	10	**A1B01XEA077**	6.3	25
105	115	**A2C01FXA003**	50	**A2C01EXA003**	25	**A2C01DXA003**	10	**A1B01XEA078**	7.7	25
	230	**A2C01FXA002**	50	**A2C01EXA002**	25	**A2C01DXA002**	10	**A1B01XEA078**	7.7	25
	550	**A2C01FXA005**	50	**A2C01EXA005**	25	**A2C01DXA005**	10	**A1B01XEA078**	7.7	25

TABLE 6—PADS AND LININGS

Brake Form	Lining & Support Plate
IC9528A or D 100	305A4800P1
IC9528A or D 101	305A4800P2
IC9528A or D 102	305A4800P3
IC9528A or D 103	305A4800P4
IC9528A or D 104	305A4800P5
IC9528A or D 105	305A4800P6
IC9528A106	277A8125P1
IC9528C or E 100	277A8107P1
IC9528C or E 101	277A8107P2
IC9528C or E 102	277A8107P3
IC9528C or E 103	277A8107P4
IC9528C or E 104	277A8107P5
IC9528C or E 105	277A8107P6

DIMENSIONS (For Estimating Only, unless endorsed for construction) Outline DWG 237B8910

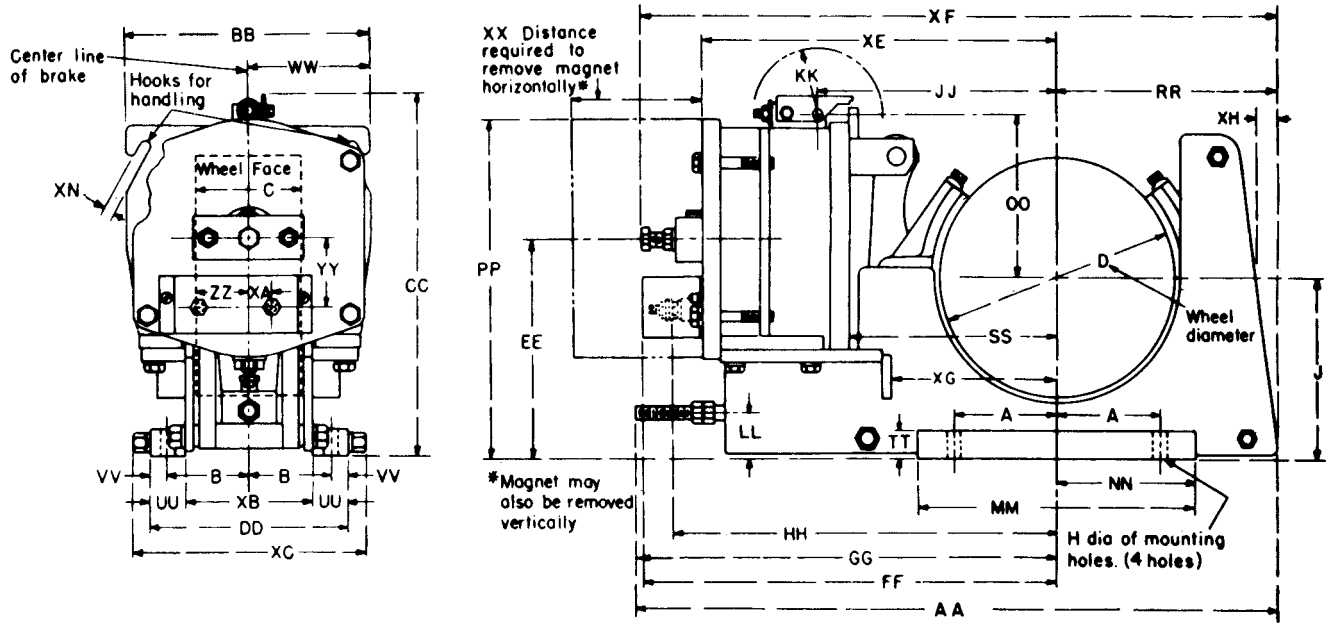

Fig. 12. IC9528 brakes, wheel sizes 8 inches through 30 inches

Brake Symbol IC9528 A, C, D or E	Approximate Net Weight in Lb		Diameter in Inches														
	Brake	Wheel	A	B	C†	D†	H	J	AA	BB	CC	DD	EE	FF	GG	HH	JJ
100	175	20	3 1/4	2 7/8	3 1/4	8	11/16	7	27 9/16	10	14 7/8	7 1/2	8 3/4	17 25/32	19 5/16	15 7/16	9 3/16
101	240	35	4	3 1/8	3 3/4	10	11/16	8 3/8	32 5/16	11 1/2	17 3/8	7 3/4	10 3/8	20 13/32	22 1/8	18 1/16	11 11/16
102	390	75	5 3/4	4 1/2	5 3/4	13	13/16	9 7/8	38	13 1/2	19 9/16	11	11 5/8	23 19/32	25 3/4	21 1/4	13 9/16
103	600	140	7 1/2	5 3/8	6 3/4	16	1 1/16	12 1/8	47 1/8	16 1/2	23 15/16	13 1/4	14 5/8	28 11/16	31 1/4	25 9/16	17 5/16
104	950	245	9 1/4	6 1/2	8 3/4	19	1 1/16	13 1/4	52 1/2	18	26 7/8	16 1/4	16	33 3/16	34 9/16	29 1/16	19 7/8
105	1965	415	11 3/4	8	11 1/4	23	1 5/16	15 7/8	59 1/8	19 3/4	31 5/8	19 1/8	19 7/8	36 5/16	36 7/8	32 3/16	22 3/4
106	3200	680	15	9 1/2	14 1/4	30	1 9/16	20 3/4	66 7/16	26	40 3/4	23	—	42 5/8	—	41 1/4	—

Bake Symbol IC9528 A, C, D or E	Dimensions in Inches																			
	KK	LL	MM	NN	OO	PP	RR	SS	TT	UU	VV	WW	XX	YY	ZZ	XA	XB	XC	XE	XF
100	3 3/4	2 5/16	21 13/16	8 1/4	7 1/8	13 3/8	8 1/4	6 15/16	1/4	1 3/4	7/8	5	6	2 5/8	1 1/2	1	4	5 3/8	14 7/16	25 1/2
101	3 3/4	2 9/16	14	7	8 1/4	15 7/8	10 3/16	9 5/16	1 1/2	1 1/2	3/4	5 3/4	6	3 5/16	1 1/4	1 1/4	4 3/4	6	17 1/16	30 1/8
102	4 1/2	2 1/2	15 1/2	7 3/4	8 7/8	18 1/8	12 1/4	11 3/8	1 1/2	2	1	6 3/4	6 5/8	3 3/4	2 5/8	1 3/8	7	8 7/8	20 1/4	36 7/32
103	4 1/2	3 1/8	21	10 1/2	11	22 1/2	15 7/8	14 9/16	2 1/2	2 1/2	1 1/4	8 1/4	7 5/16	4 11/16	2 5/8	1	8 1/4	10 3/4	24 5/16	44 27/32
104	6 1/2	2 1/2	30	12 1/16	12 1/2	24 11/16	17 15/16	16 7/16	3	3	1 5/8	9	8 3/8	5 3/16	4	0	10 1/4	19 1/2	27 9/16	50 27/32
105	6 1/2	3 3/16	36 5/16	16 13/16	14 5/8	29 7/16	22 1/4	19 1/16	4	3	1 9/16	9 7/8	8 7/16	6	4	0	13 1/8	22 1/4	30 11/16	58 7/8
106	—	—	34	17	—	—	23 1/4	25	1 1/2	—	2	13	7 11/16	—	—	—	—	—	43 3/16	66 7/16

* Entire magnet housing can also be removed vertically.

† Also see DIMENSIONS on pages 1-7 and 1-8.

Brake Symbol IC9528 A, C, D or E	Dimensions in Inches			Brake Form IC9528 A, C, D or E	WK² of Wheel Lb-ft²	Maximum Allowable Speed RPM
	XG	XH	XN			
100	—	1	1/2	**100**	1.0	7000
101	7 11/16	1 3/8	1/2	**101**	3.1	5500
102	9 11/16	1 1/4	5/8	**102**	12.8	4310
103	11 3/16	1 7/8	5/8	**103**	32.0	3500
104	12 5/8	1 3/4	3/4	**104**	78.0	2950
105	16 1/2	2 3/4	3/4	**105**	205.0	2440
106	—	—	—	**106**	700	1870

IC7483 RECTIFIER-NOMENCLATURE AND DIMENSIONS

IC7483 K100-K105 A 02

Brake Family

K100,K101,K102=IC9528 100, 101, 102
K103,K104,K105=IC9528 103, 104, 105

Enclosure
A=No enclosure
B=NEMA 1
C=NEMA 4

Voltage & Cycles
01=230v 60Hz
02=460v 60Hz
03=575v 60Hz

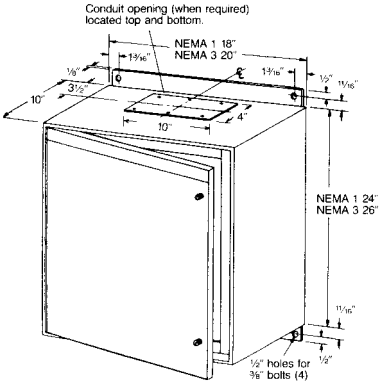

Fig. 13. Shunt rectifier NEMA 1 or 4 enclosure for wall mounting

Data subject to change without notice

BRAKES

Type IC9528 Outline 237B8910AB

OUTLINE DRAWING AND DIMENSIONS—BRAKE WHEELS STRAIGHT BORE WHEEL DATA

Motor Frame CD	Brake IC9528 A or C D or E	XD	Z	U	Keyway Width	Keyway Depth	E	R	Brake Wheel Cat No. # *
218AT	100	5.25	10.50	1.123	¼	⅛	1.75	2.75	171B3268P26
219AT									
2110AT									
258AT		6.25	10.20	1.373	5/16	5/32	2.25	3.25	171B3268P13
259AT			10.30						
287AT		7.00	13.50	1.623	⅜	3/16	2.75	3.75	171B3268P2
288AT			13.78						
327AT		8.00	14.00	1.873	½	¼	2.75	3.75	277A8180P15
328AT			13.87						
365AT		9.00	15.56	2.123			3.00	4.00	277A8181P19
366AT			16.00						
368AT			15.00						
287AT	101	7.00	13.80	1.625	⅜	3/16	2.75	4.00	157B2754P35
288AT			14.00						
327AT		8.00	14.00	1.873	½	¼	3.00	4.00	157B2754P10
328AT			13.87						
365AT		9.00	15.82	2.123			3.00	4.25	277A8182P19
366AT			16.25						
368AT			15.25						
407AT		10.00	14.63	2.373	⅝	5/16	3.00	3.13	171B3226P2
L407AT			18.00						
409AT			15.13						
L409AT			18.53						
504AT		12.50	20.00	2.873	¾	⅜	4.25	4.25	277A8183P31
L504AT			21.75						
506AT			20.00						
L506AT			21.75						
508AT			20.00						
L508AT			21.75						
365AT	102	9.00	15.89	2.123	½	¼	3.19	4.50	171B3247P22
366AT			16.33						
368AT			15.33						
407AT		10.00	15.75	2.373	⅝	5/16	3.50	4.75	277A8184P15
L407AT			19.15						
409AT			16.25						
L409AT			19.65						
504AT		12.50	20.38	2.873	¾	⅜	5.00	5.38	171B3247P17
L504AT			22.13						
506AT			20.38						
L506AT			22.13						
508AT			20.38						
L508AT			22.13						
504AT	103	12.50	22.00	2.873	¾	⅜	4.50	6.50	277A8190P15
L504AT			23.75						
506AT			22.00						
L506AT			23.75						
508AT			22.00						
L508AT			23.75						
504AT	104	12.50	22.50	2.873	¾	⅜	5.00	7.50	277A8176P15
L504AT			24.25						
506AT			22.50						
L506AT			24.25						
508AT			22.50						
L508AT			24.25						

* Wheel Cat. Nos. listed are for use with GE Kinematic® motors, dripproof and TENV. Wheels for use with other motors must be ordered by description and include motor outline.

† Special wheel casting. Special price. Refer to Company.

#Interference Fit Bore.

TABLE—Standard Catalog Numbers

Straight Bore	Tapered Bore
IC9528 100—8-INCH WHEELS	
118B8880P_ _ 129B5606P_ _ 171B3268P_ _ 171B7746P_ _ 167A8911P_ _ 277A8180P_ _ 277A8181P_ _	118B8881P_ _ 139B7141P_ _
IC9528 101—10-INCH WHEELS	
118B8882P_ _ 157B2754P_ _ 171B3226P_ _ 171B3288P_ _ 167A5656P_ _ 277A8182P_ _ 277A8183P_ _ 305A1263P_ _	118B8883P_ _ 129B5608P_ _ 129B5631P_ _
IC9528 102–13-INCH WHEELS	
118B8884P_ _ 118B8922P_ _ 119B1390P_ _ 157B6829P_ _ 171B3247P_ _ 171B3280P_ _ 171B3426P_ _ 171B3616P_ _ 177B8727P_ _ 277A8184P_ _ 277A8185P_ _	118B8885P_ _ 118B8902P_ _ 118B8926P_ _ 171B3285P_ _ 171B3450P_ _ 171B3451P_ _ 171B3452P_ _ 171B3453P_ _
IC9528 103—16-INCH WHEELS	
118B8886P_ _ 139B7155P_ _ 139B7182P_ _ 167A9997P_ _ 167A8980P_ _ 171B3611P_ _ 277A8189P_ _ 277A8190P_ _	118B8887P_ _ 149B2888P_ _
IC9528 104—19-INCH WHEELS	
118B8888P_ _ 129B9459P_ _ 158B2012P_ _ 171B3259P_ _ 171B3424P_ _ 174A7348P_ _ 174A6262P_ _ 174A7349P_ _ 187B5620P_ _ 277A8176P_ _ 277A8188P_ _	118B8889P_ _ 177B8721P_ _ 273A2026F_ _ 305A1267P_ _ 171B3449P_ _
IC9528 105—23-INCH WHEELS	
118B8890P_ _ 157B6814P_ _ 171B3425P_ _ 168A1705P_ _ 277A8191P_ _ 277A8192P_ _	118B8891P_ _ 171B3447P_ _ 171B3448P_ _
IC9528 106—30-INCH WHEELS	
157B8694P_ _	139B8184P_ _

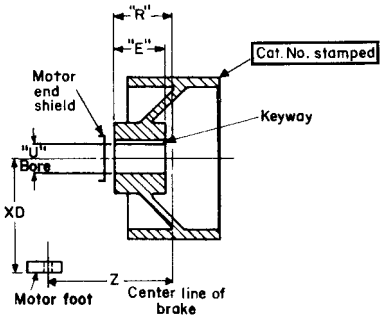

Fig. 14. Straight Bore Wheel

Data subject to change without notice

Type IC9528, Outline 237B8910AA

OUTLINE DRAWING AND DIMENSIONS—BRAKE WHEELS—TAPERED BORE

Motor Frame MD	Brake IC9528 A, C, D or E	Dimensions in Inches							Brake Wheel Cat. No.
		XD	Z	U	Keyway Width	Keyway Depth	E	R	
402-602-802	100	7.625	8.250	1.750	½	¼	3.000	4.000	118B8881P4
603-803		8.500	9.000	2.000			3.500	4.000	118B8881P5
604-804		9.000	9.500	2.000			3.500	4.000	118B8881P5
606		10.000	9.500	2.500			4.000	4.000	118B8881P6
402-602-802	101	7.625	8.500	1.750	½	¼	3.000	4.250	171B3454P16†
603-803		8.500	9.250	2.000			3.500	4.250	118B8883P6
604-804		9.000	9.750	2.000			3.500	4.250	118B8883P6
606-806		10.000	9.750	2.500			4.000	4.250	118B8883P7
608		11.250	9.875	3.000	¾	¼	4.500	4.250	118B8883P12
603-803	102	8.500	10.000	2.000	½	¼	3.500	5.000	118B8926P12
604-804		9.000	10.500	2.000			3.500	5.000	118B8926P12
606-806		10.000	10.500	2.500			4.000	5.000	118B8885P3
608-808		11.250	11.000	3.000	¾	¼	4.500	5.375	118B8885P1
610-810		12.250	11.625	3.250			4.500	5.375	118B8885P2
612-812		13.375	12.125	3.625			5.000	5.375	171B3452P20
614		14.750	13.125	4.250	1	⅜	5.000	5.375	118B8885P16
606-806	103	10.000	12.000	2.500	½	¼	4.000	6.500	149B2888P19
608-808		11.250	12.125	3.000	¾	¼	4.500	6.500	118B8887P4
610-810		12.250	12.750	3.250			4.500	6.500	118B8887P5
612-812		13.375	13.250	3.625			5.000	6.500	118B8887P6
614-814		14.750	14.250	4.250	1	⅜	5.000	6.500	118B8887P7
616-816		16.000	15.500	4.625	1 ¼	⅜	5.500	6.500	118B8887P8
608-808	104	11.250	13.125	3.000	¾	¼	4.500	7.500	177B8721P4
610-810		12.250	13.750	3.250			4.500	7.500	177B8721P5
612-812		13.375	14.250	3.625			5.000	7.500	118B8889P5
614-814		14.750	15.250	4.250	1	⅜	5.000	7.500	118B8889P6
616-816		16.000	16.500	4.625	1 ¼	⅜	5.500	7.500	118B8889P7
618-818		17.750	16.000	5.000	1 ¼	½	6.000	7.500	118B8889P8
620		20.875	16.000	5.875	1 ½	¾	6.750	7.500	118B8889P33
612-812	105	13.375	15.000	3.625	¾	¼	5.000	8.250	118B8891P23
614-814		14.750	16.000	4.250	1	⅜	5.000	8.250	118B8891P2
616-816		16.000	17.250	4.625	1 ¼	⅜	5.500	8.250	118B8891P1
618-818		17.750	17.250	5.000	1 ¼	½	6.000	8.750	118B8891P3
620		20.875	18.250	5.875	1 ½	¾	6.750	9.750	118B8891P15
622		23.000	17.500	6.250			7.250	9.750	118B8891P30
624		24.000	18.250	7.000			9.250	9.750	118B8891P14
616-816	106	16.000	18.000	4.625	1 ¼	⅜	5.500	9.000	139B8184P4
618-818		17.750	19.000	5.000	1 ¼	½	6.000	10.500	139B8184P5
620		20.875	18.750	5.875	1 ½	¾	6.750	10.250	139B8184P1
622		23.000	18.500	6.250			7.250	10.750	139B8184P2
624		24.000	19.250	7.000			9.250	10.750	139B8184P3

* Wheel Cat. Nos. listed are for use with GE Kinematic® motors, dripproof and TENV. Wheels for use with other motors must be ordered by description and include motor outline.

† Special wheel casting. Special price. Refer to Company.

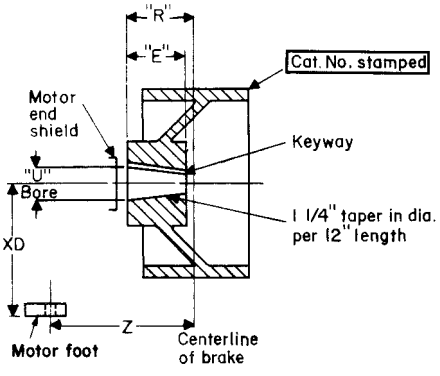

Fig. 15

Motor Frame CD	Brake IC9528 A or C, D or E	XD	Z	U	Keyway Width	Keyway Depth	E	R	Brake Wheel Cat No. *
218AT	100	5.25	10.50	1.125	¼	⅛	2.38	2.78	139B7141P23
219AT									
2110AT									
258AT		6.25	10.20	1.375	5/16	5/32	2.75	3.30	139B7141P24
259AT			10.30						
287AT		7.00	13.85	1.625	⅜	3/16	3.00	4.00	118B8881P38
288AT			14.09						
327AT		8.00	14.06	1.875	½	¼	3.25	4.25	171B3456P7†
328AT			13.94						
365AT		9.00	15.76	2.125			3.62	4.68	171B3456P9†
366AT			16.00						
368AT			15.20						
287AT	101	7.00	13.97	1.625	⅜	3/16	3.00	4.12	118B8883P44
288AT			14.21						
327AT		8.00	14.06	1.875	½	¼	3.25	4.25	129B5631P12
328AT			13.95						
365AT		9.00	15.82	2.125			3.63	4.75	171B3454P17†
366AT			16.27						
368AT			15.27						
407AT		10.00	14.94	2.375	⅝	5/16	3.88	4.19	118B8883P27
L407AT			18.31						
409AT			15.44						
L409AT			18.84						
504AT		12.50	20.00	2.875	¾	⅜	4.50	3.71	129B5631P34
L504AT			21.75						
506AT			20.00						
L506AT			21.75						
508AT			20.00						
L508AT			27.15						
365AT	102	9.00	16.26	2.125	½	¼	3.63	5.19	118B8885P35
366AT			16.71						
368AT			15.71						
407AT		10.00	15.75	2.375	⅝	5/16	3.88	5.00	118B8902P30
L407AT			19.15						
409AT			16.25						
L409AT			19.65						
504AT		12.50	20.38	2.875	¾	⅜	4.50	4.09	171B3452P33†
L504AT			22.13						
506AT			20.38						
L506AT			22.13						
508AT			20.38						
L508AT			22.13						
683AY		17.00	21.63	3.250	¾	⅜	4.63	5.00	118B8926P28
684AY			22.63						
685AY			23.38						
504AT	103	12.50	22.00	2.875	¾	⅜	4.50	5.70	149B2888P21
L504AT			23.75						
506AT			22.00						
L506AT			23.75						
508AT			22.00						
L508AT			23.75						
683AY		17.00	23.12	3.250			4.63	6.50	149B2888P37
684AY			24.12						
685AY			24.87						
504AT	104	12.50	22.50	2.875			4.50	6.20	177B8721P7
L504AT			24.25						
506AT			22.50						
L506AT			24.25						
508AT			22.50						
L508AT			24.25						
683AY		17.00	23.75	3.250			4.63	7.13	118B8889P41
684AY			24.75						
685AY			25.50						
683AY	105		24.50					7.88	118B8891P28
684AY			25.50						
685AY			26.25						

WHERE TO USE

IC9516 brakes are spring-set, electrically released brakes operated by solenoids in the smaller sizes and Thrustor Plus® mechanisms in the larger sizes. They provide reliable low-cost operation on varied applications throughout industry. They are used on cranes, bridges, turn-tables, conveyors, machine tools, elevators, printing presses, hoists, locks and dams, overhead doors, and deck machinery. GE IC9516 brakes, either Thrustor or solenoid operated, are spring-set, two-shoe brakes. They are electrically released by a solenoid in the smaller sizes and by a Thrustor mechanism in the larger ratings.

Easily adjustable braking torque, down to 50% rating, is incorporated in the sturdy, simple construction of these brakes.

High-inertia loads offer ideal applications for the Thrustor Plus-operated brake. Its ability to apply and remove braking pressure smoothly makes it highly desirable for application in cranes, hoists, and elevators.

Speed of operation of the Thrustor Plus mechanism—both setting and releasing—can be independently adjusted to enable stored energy of the load to be dissipated before brake pressure is applied.

FEATURES

1. Durable linkage isolates shock of solenoid from brake for longer life.
2. Only 3 simple adjustments:
   A. Shoe clearance
   B. Solenoid or Thrustor mechanism gap
   C. Brake torque
3. Long solenoid life is provided because spring is designed for low build-up characteristics.
4. To help protect and maintain full-load on solenoid, lever ratio is adjustable for required torque range.
5. Large diameter pins permit correct alignment and provide liberal bearing surfaces.
6. Non-asbestos linings.
7. Special non-scoring rivets securely hold easily replaceable lining.
8. Connections are better protected by conduit box.
9. Rapid cooling provided because shoes cover only half the wheel.
10. Sturdy, rigid base construction is provided for both type brakes.
11. Yoke pins near center line of wheel afford even lining wear.
12. Thrustor mechanism provides a cushion when releasing and setting the brake, thereby preventing stresses from being transmitted to the driven machinery during starts and stops.
13. Adjustable time-delay settings are provided on Thrustor plus brakes.

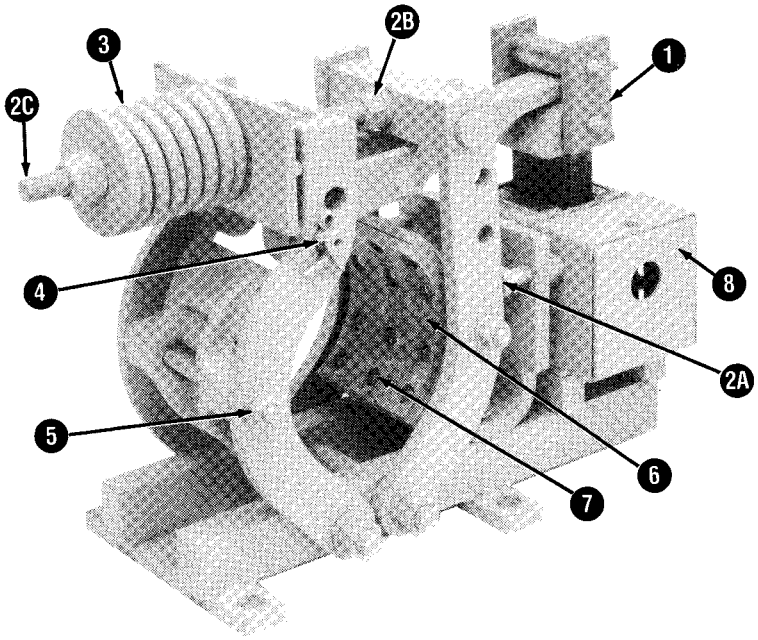

Fig. 16. IC9516 Solenoid Brake

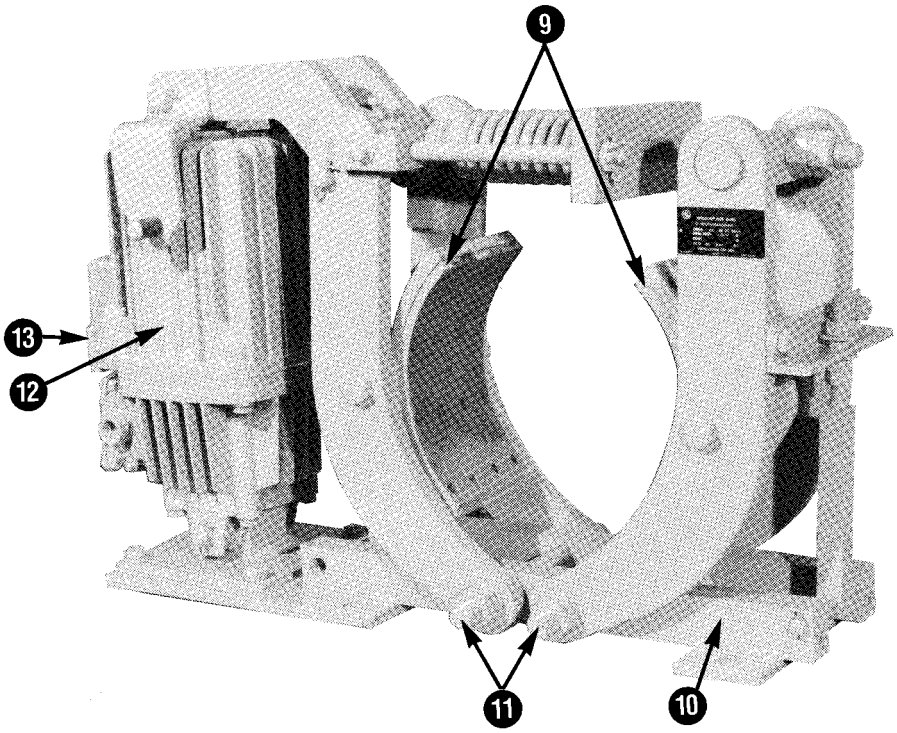

Fig. 17. IC9516 Thrustor Plus Brake

GE THRUSTOR PLUS DRUM BRAKES—125 to 1600 lb ft rated

EXAMPLE OF COMPLETE IC CATALOG NUMBER IS AS FOLLOWS:

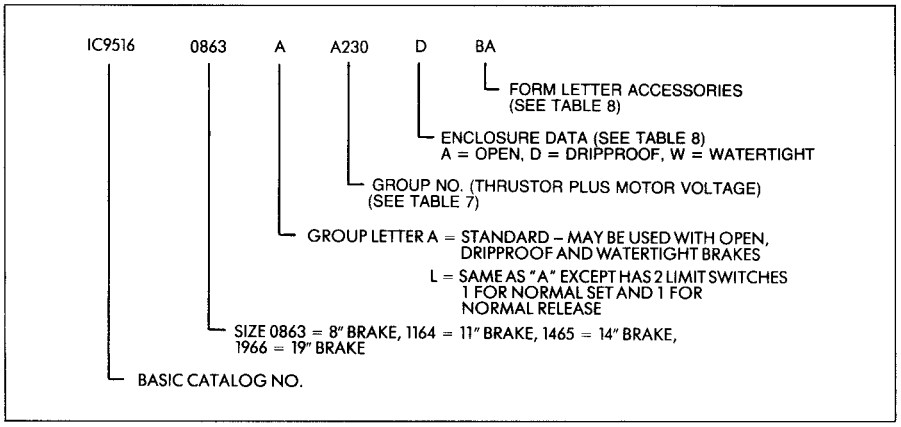

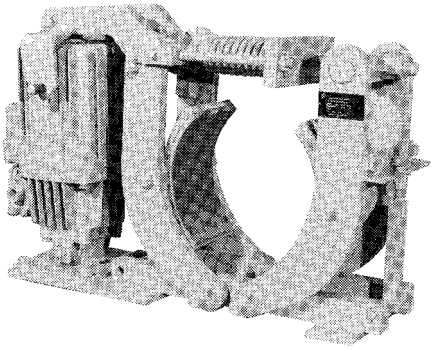

Fig. 18. IC9516 Thrustor Plus Brake

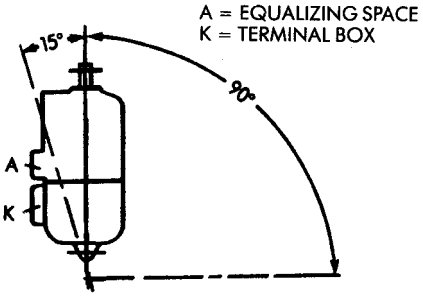

Fig. 19. Thrustors can be mounted vertically, at an angle and horizontally as shown above. Care must always be taken to ensure that the equalizing space "A" lies uppermost

TABLE 7—IC9516 Ac Drum Brakes

Wheel Diam Inches	Torque In Lb-Ft. Cont.	Rating Lb-Ft. 60 Min.	Open Brake Form** Non Corr Hdwe	Motor Voltage 3 Phase 230V	Motor Voltage 3 Phase 460V	Enclosure See Table 2 Below	Wheels Straight Bore	Wheels Tapered Bore
8	125	160	**IC95160863A**	A230	A460	---	See page 1-15	
11	325	400	**IC95161164A**	B230	B460	---		
14	600	800	**IC95161465A**	C230	C460	---		
19	1200	1600	**IC95161966A**	D230	D460	---		

** For Thrustor Plus Brakes with 2 limit switches (1 for normal set and 1 for normal release) use group "L" instead of "A". Example IC95160863L.

* Cat number and price do not include wheel. See **HOW TO ORDER**, page 1-11.

NOTE—Thrustor Plus operating temperature range is −25°C to +50°C.

TABLE 8—OPEN, DRIPPROOF ENCLOSURE OR WATERTIGHT ENCLOSURE, WITH MODIFICATIONS

Basic Cat. No.	Open No Modifications		Open w/Hand Release		Open w/Hand Release and Limit Switch		Dripproof Encl No Modifications		Dripproof Encl w/Hand Release		Dripproof Encl w/Hand Release and Limit Switch	
9516 Form	Left Hand	Right Hand	Left Hand	Right Hand	Left Hand	Right Hand	Left Hand	Right Hand	Left Hand	Right Hand	Left Hand	Right Hand
0863A	**AAA**	**AAB**	**ABA**	**ABB**	**ACA**	**ACB**	**DAA**	**DAB**	**DBA**	**DBB**	**DCA**	**DCB**
1164A	**AAA**	**AAB**	**ABA**	**ABB**	**ACA**	**ACB**	**DAA**	**DAB**	**DBA**	**DBB**	**DCA**	**DCB**
1465A	**AAA**	**AAB**	**ABA**	**ABB**	**ACA**	**ACB**	**DAA**	**DAB**	**DBA**	**DBB**	**DCA**	**DCB**
1966A	**AAA**	**AAB**	**ABA**	**ABB**	**ACA**	**ACB**	**DAA**	**DAB**	**DBA**	**DBB**	**DCA**	**DCB**

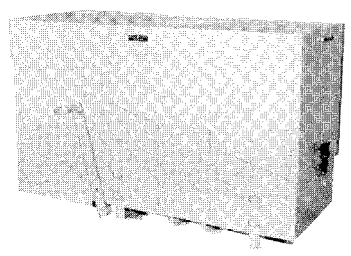

Fig. 20. IC9156 brake with GE Type 3 enclosure and optional hand release

TABLE 8A—MODIFICATIONS (cont.)

Basic Cat. No.	Watertight Encl ‡¶ No Modifications	Watertight Encl ‡¶ w/Hand Release	Watertight Encl ‡¶ w/Hand Release and Limit Switch	Watertight Encl ‡ and 1 Shaft Seal	Watertight Encl ‡ w/Hand Release and 1 Shaft Seal	Watertight Encl ‡ w/Hand Release, S Seal and Lm Sw
9516 Form	Suffix Letters	Suffix Letters	Suffix Letters	Suffix Letters	Suffix Letters	Suffix Letters
0863A	**WA#**	**WB#**	**WC#**	**WM#**	**WD#**	**WF#**
1164A	**WA#**	**WB#**	**WC#**	**WM#**	**WD#**	**WF#**
1465A	**WA#**	**WB#**	**WC#**	**WM#**	**WD#**	**WF#**
1966A	**WA#**	**WB#**	**WC#**	**WM#**	**WD#**	**WF#**

¶ End shield mated.

‡ Must specify left or right assembly and type of motor to be used with brake.

Third letter to be determined by GEDS.

For APPLICATION DATA, refer to page 1-12.

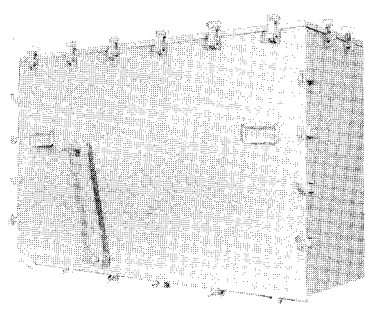

Fig. 21. IC9516 brake with GE Type 4 enclosure, and optional hand release

IC9516 SOLENOID DRUM BRAKES—10 lb ft to 600 lb ft ratings

TABLE 9—AC SOLENOID OPERATED BRAKES

Wheel Diam in Inches	Torque Rating In Lb.-Ft.		Brake Nomenclature (IC9516 & Voltage Suffix) EXAMPLE IC9516460BB002AC015					
	Con-tinuous	60 Min.	Open Brake With Corrosion Resistant Fittings	Brake w/Type 3 Enclosure & Corrosion Resistant Fittings	Voltage Suffix			
					115V	230V	460V	575V
3 7/32	10	15	**IC9516460BB002AA**		018	017	015	016
3 7/32	10	15		**IC9516460BB002AC**	018	017	015	016
4 15/32	25	35	**IC9516461H006AA**		024	009	017	023
4 15/32	25	35		**IC9516461H006AC**	024	009	017	023
5 3/4	50	75	**IC9516462U005AA**		024	009	019	023
5 3/4	50	75		**IC9516462U005AC**	024	009	019	023
8	125	160	**IC9516463J001AA**		017	018	016	013
8	125	160		**IC9516463J001AC**	017	018	016	013
11	325	400	**IC9516464V001AA**		N/A	017	015	014
11	325	400		**IC9516464V001AC**	N/A	017	015	014
14	600	600	**IC9516465R001AA**		N/A	011	009	012
14	600	600		**IC9516465R001AC**	N/A	011	009	012

HOW TO ORDER

Standard Ac Brake (Open)

Specify complete catalog number of standard ac solenoid- or Thrustor-operated brake from tables on page 1-10, 1-11. Complete catalog number consists of IC number, brake form number and suffix number.

EXAMPLE: IC95160863AA460 AAA

Brake Wheel

Furnish catalog number (see page 1-15) or dimensions per sketch Fig. 22.

REFERENCES:

Instructions
- Solenoid-operated.....GEH-641
- Thrustor-operated.....GEH-5833

Renewal Parts
- IC9516-460BB1 .....GEF-4320
- Brake shoes .....See below
- IC9516-461H, 462U, 463J, 464V, 465R.....GEF-4321
- IC9516 0863, 1164, 1465, 1966 .....GEF-8013

Obsolete Thrustor (IC9504) Operated Brakes

IC9516 Thrustor operated brakes that utilized IC9504 Thrustors are replaced by Thrustor Plus brakes (page 1-10). For replacement, provide complete IC9516 nameplate data from obsolete brake. (EX: IC9516464S001AA149).

Special and Replacement Wheels Ordering Information

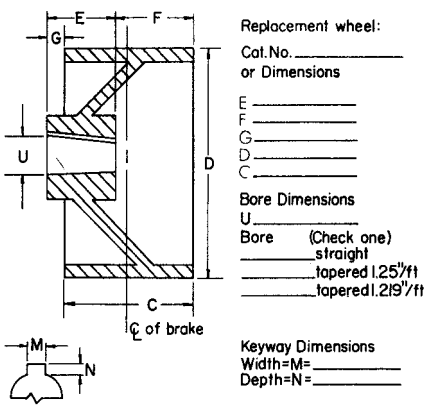

Fig. 22. If new application furnish motor outline and/or above dimensions

BRAKE SHOES AND LININGS

Brake Form	Brake shoes with Lining (Qty 2 per brake)	Lining only with Rivits (Qty 2 per brake)
IC9516-460 BB	2841029G4	NA
IC9516-461 H	2841055G4	NA
IC9516-462 U	2841048G18	NA
IC9516-463 J or 0863	2841048G6	21x465
IC9516-464 V or 1164	2841048G3	21x466
IC9516-465 R or 1465	2841066G2	21x467
IC9516-1966	2841066G1	21x468

Application Data

General

SELECTION OF RATINGS

For normal holding applications select a brake that will provide a torque equal to the motor full-load torque. If the motor full-load torque is not known, determine it from the following formula:

$$\text{Torque in pound feet} = \frac{5250 \times \text{motor hp}}{\text{motor full load rpm}}$$

For duty cycle and stopping applications the heat dissipating capacity of the brake may be the determining factor in selection.

TORQUE RATING

Torque ratings are maximum values of torque the brake is designed to provide. Torque can be adjusted downward to 50 percent of rating to suit characteristics of load.

SHUNT-WOUND BRAKES

All ac solenoid and Thrustor® Plus brakes are used as shunt devices, being energized simultaneously with the motor or by a separate brake contactor. Dc solenoid brakes are furnished for shunt operation only.

MOUNTING POSITION

Solenoid-operated brakes can be mounted in the following positions: (1) horizontal (floor or bracket mounting), (2) vertical (base against wall) with horizontal shaft, (brake must be mounted with solenoid below the wheel), or (3) ceiling mounted (base against ceiling). No additional parts are required.

Thrustor-operated brakes can be mounted horizontal (on floor) or tilted. See Fig. 19 page 1-10 for operating range.

OPEN BRAKES

Specify open brakes for indoor locations subject to normal dust and no more than light indirect splashing.

CORROSION-RESISTANT FITTINGS

All brakes include corrosion resistant fittings for operation outdoors or indoors in the presence of corrosive atmospheres or extreme moisture conditions, whether brake is open or enclosed.

CONDUIT BOX

Provision for terminating conduit is furnished on all forms of the IC9516 brake as standard equipment.

Thrustor Operated

GE TYPE 3—WEATHER-RESISTANT BRAKES

Specify GE Type 3 weather-resistant brakes for outdoor locations subject to occasional rain, sleet or snow. Brakes include corrosion-resistant fittings for most effective indoor or outdoor protection. See page 1-14 for dimensions.

GE TYPE 4-WATERTIGHT/DUST TIGHT FOR THRUSTOR PLUS BRAKES

Specify GE Type 4 watertight and dust-tight brakes for outdoor locations subject to splashing water, seeping water, rain, snow, falling or hose-directed water or severe external condensation. The GE Type 4 enclosure is also suitable for severe dust and dirt environments. The brake mechanism is protected by a complete enclosure which includes a gasketed surface for bolting to the motor-end shield. The motor-end shield must be drilled and tapped for screws to hold the enclosure to motor and form a water-tight seal. See page 1-14 for dimensions.

Normally the standard mounting of a brake is with the Thrustor at the left facing the motor from the brake end (left hand); hence the standard enclosure is made to permit such mounting. Since the hole for the motor shaft is not in the center of the enclosure, it is important to state on the order if enclosure is to be used on a brake with the Thrustor on the right.

Motors to be used with enclosed brakes will usually have to be ordered with a longer shaft extension than that required for an open brake.

ENCLOSURE ORIENTATION

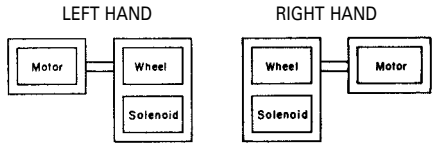

Fig. 25.

SHAFT SEALS—FOR USE WITH GE TYPE 4 ENCLOSURES

When using enclosed brakes with totally enclosed fan-cooled motors, to which the brake enclosure cannot be bolted, or if the brake is used on a shaft other than a motor shaft, it is necessary to specify a shaft seal for the brake. Two shaft seals must be specified if the shaft projects completely through the brake enclosure.

HAND RELEASE

Hand release permits the Thrustor operated brake to be released without energizing the brake. This can be done from the outside of the brake on enclosed forms.

ELECTRICAL INTERLOCK—HAND RELEASE

The interlocking limit switch for hand release is for use in making the associated control inoperative while the Thrustor operated brake is in the hand-released position. The interlock provides two circuits—one normally open and one normally closed.

ELECTRICAL INTERLOCK—NORMAL RELEASE AND NORMAL SET

These interlocks include a two-circuit limit switch (1NO, 1NC) operated mechanically when the Thrustor mechanism reaches the end of the brake-release stroke.

TIME-DELAY SETTING

Independent adjustable speed of operation for setting and releasing is furnished as a standard feature on all Thrustor brakes.

THRUSTOR OIL

Oil for Thrustor brakes is intended for ambient temperatures of −25 C to +50 C (spec Shell Oil Tellus C1O).

MOTOR CURRENTS

IC9516 Form	Thrustor Mechanism	Volts	Current (Amps)
0863	323A1056A230	230	0.95
	323A1056A460	460	0.49
1164	323A1056B230	230	0.94
	323A1056B460	460	0.47
1465	323A1056C230	230	2.30
	323A1056C460	460	1.40
1966	323A1056D230	230	2.60
	323A1056D460	460	1.30

Motor Voltage ± 5 Percent

Solenoid Operated

GE TYPE 3—WEATHER-RESISTANT BRAKES

Specify GE Type 3 weather-resistant brakes for outdoor locations subject to occasional rain, sleet or snow. Brakes include corrosion-resistant fittings for most effective outdoor or indoor protection. See page 1-14 for dimensions.

SOLENOIDS

Refer to applicable renewal parts bulletin for solenoid and operating coil numbers for replacement purposes.

Ac SOLENOID COIL BURDEN

IC9516 Form	Inrush Volt/amp	Holding Volt/amp
460	1570	100
461	5450	390
462	5450	390
463	12600	715
464	31200	1760
465	31200	1760

Enclosures—IC9516 (Dimensions in inches for estimating only)

DIMENSIONS (For Estimating Only)

SOLENOID OPERATED

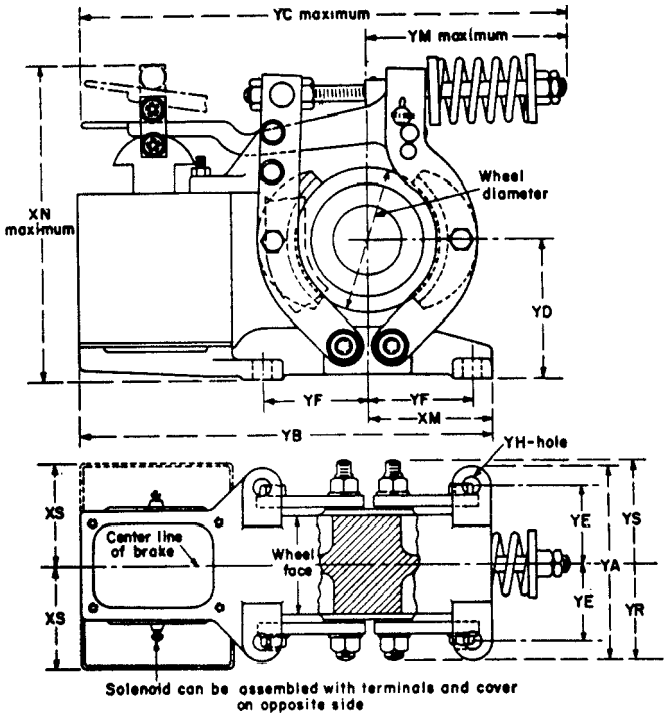

Fig. 26.

THRUSTOR® OPERATED

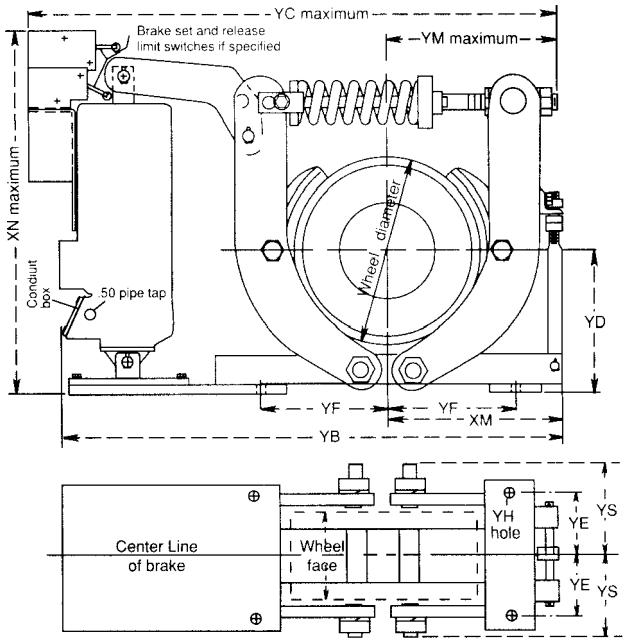

Fig. 27.

SOLENOID OPERATED

IC9516 Brake Form	Weight of Brake Incl Wheel, in Lb	Dimensions in Inches														
		Brake Wheel		XM	XN	XS	YA	YB	YC	YD	YE	YF	YH	YM	YR	YS
		Dia	Width (Face)													
161	72	4 15/32	3	3 7/8	9 11/16	4 7/16	6	13 9/16	15 13/16	4 1/4	2 3/8	3 1/4	9/16	6 1/8	3	3 5/16
460	17	3 7/32	1 3/4	2 5/8	7 5/16	2 7/8	3 1/4	9 1/8	10	3 1/8	1 1/4	2 1/4	11/32	4 1/4	1 11/16	1 13/16
461	43	4 15/32	3	3 7/8	9 11/16	3 5/32	6	12 13/16	14 1/4	4 1/4	2 3/8	3 1/4	9/16	6 7/16	2 15/16	3 5/16
462	72	5 3/4	3	4 3/4	12 3/8	3 5/32	6	16 1/2	17 1/2	5 1/4	2 3/8	4	9/16	6 15/32	3 3/16	3 5/8
463	135	8	3 1/2	6 3/8	13 1/4	3 7/8	7	21 1/4	21 5/8	6 1/8	2 5/8	5 3/4	11/16	7	3 5/8	4
464	300	11	5	8 3/8	18 3/4	4 13/16	8 3/4	28 7/16	32	8 1/4	3 1/2	7 1/2	11/16	11 3/4	4 3/8	5 1/8
465	423	14	6 1/2	10 3/4	22	5 11/16	11 1/2	33 7/16	36	10 1/2	4 1/2	9 1/2	13/16	13	5 3/4	6 9/16

THRUSTOR OPERATED

IC9516 Brake Form	Weight of Brake Incl Wheel in Lb	Dimensions in Inches												
		Brake Wheel		XM	XN	YB	YC	YD	YE	YF	YH	YM	YR	YS
		Dia	Width (Face)											
0863	101	8	3 1/2	7 1/8	15 5/8	19	24 13/16	6 1/8	2 5/8	5 3/4	21/32	9 1/4	3 5/8	4
1164	315	11	5	10 1/4	23 1/8	29 1/4	34	8 1/4	3 1/2	7 1/2	21/32	11 3/4	4 3/4	5 1/4
1465	470	14	6 1/2	12 1/8	24 5/8	35	38 5/8	10 1/2	4 1/4	9 1/2	25/32	13	5 15/16	6 9/16
1966	730	19	8	14 7/8	30	43	44 7/8	12 1/2	5 3/8	11 7/8	15/16	16	7 5/16	8

Enclosures—IC9516 (Dimensions in inches for estimating only)

DRIP COVER—GE Type 3 Solenoid Brakes

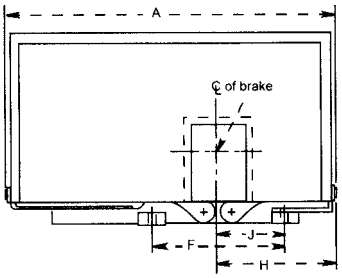

Side View

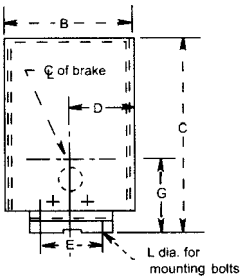

End View

IC516 Solenoid	Drip Cover—Type 3									
	A	B	C	D	E	F	G	H	J	L
460	13.63	6.00	8.38	3.00	2.50	4.50	3.13	5.38	2.25	11/32
461	21.00	7.00	11.63	3.50	4.75	6.50	4.25	7.63	3.25	9/16
462	25.00	8.75	14.13	4.38	4.75	8.00	5.25	8.50	4.00	9/16
463	29.25	11.00	18.13	5.50	5.25	11.50	6.13	10.63	5.75	21/32
464	37.25	14.25	21.88	7.13	7.00	15.00	8.25	13.63	7.50	11/16
465	40.00	12.75	22.50	6.25	9.00	19.00	10.50	14.25	9.50	13/16

DRIP COVER—GE Type 3 Thrustor Plus Brakes

Brakes may be furnished with limit switch for manual released or electrically operated or both when ordered.

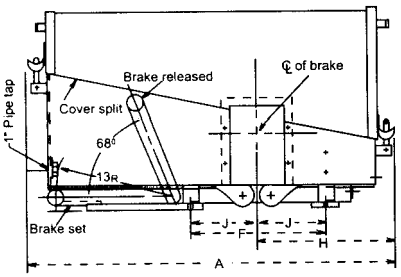

Side View

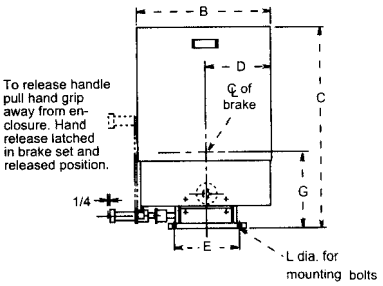

End View

IC9516 Thrustor Plus	Drip Cover—Type 3									
	A	B	C	D	E	F	G	H	J	L
0863	31.25	10.75	18.13	5.38	5.25	11.50	6.13	10.63	5.75	21/32
1164	39.50	15.00	24.25	7.50	7.00	15.00	8.25	14.75	7.50	21/32
1465	45.75	16.00	28.38	8.00	9.00	19.00	10.50	16.38	9.50	25/32
1966	55.75	19.00	33.25	9.50	10.75	23.75	12.50	20.00	11.88	15/16

WATERTIGHT—GE Type 4 Thrustor Plus & Dc Magnet Brakes

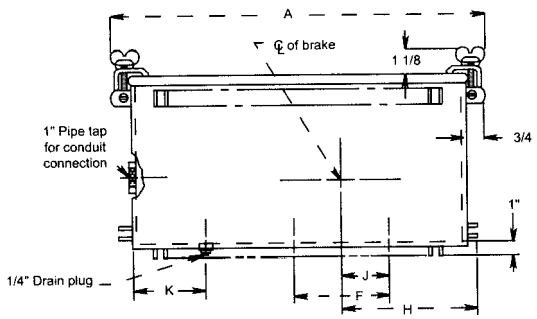

Side View

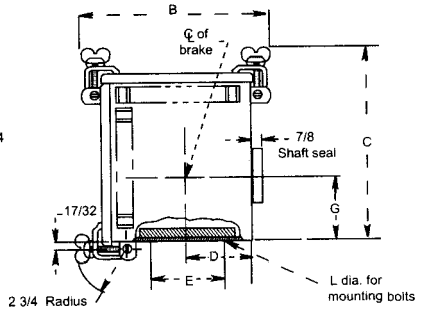

End View

IC9516 Thrustor Plus	Watertight Enclosures—Type 4										
	A	B	C	D	E	F	G	H	J	K	L
0863	31.00	14.00	21.13	5.13	5.25	11.50	6.25	11.13	5.75	3.00	21/32
1164	40.00	16.00	26.13	6.88	7.00	15.00	8.38	14.13	7.50	3.00	21/32
1465	45.00	18.00	29.13	7.38	9.00	19.00	10.63	15.38	9.50	3.00	25/32
1966	53.00	20.00	36.13	8.88	10.75	23.75	12.63	19.13	11.88	3.00	15/16

IC9528 DC Magnet	Watertight Enclosures—Type 4										
	A	B	C	D	E	F	G	H	J	K	L
100	32.00	14.00	19.13	5.38	5.75	6.50	7.13	10.13	3.25	3.00	11/16
101	37.00	15.00	21.13	6.13	6.25	8.00	8.50	12.13	4.00	3.00	11/16
102	42.00	17.00	26.13	7.13	9.00	11.50	10.00	14.38	5.75	3.00	13/16
103	51.00	20.00	29.13	8.88	10.75	15.00	12.25	8.13	7.50	3.00	1 1/16
104	58.00	23.00	34.13	10.13	13.00	18.50	13.38	20.13	9.25	3.00	1 1/16
105	66.00	29.00	37.13	12.00	16.00	23.50	16.00	25.75	11.75	3.00	1 5/16

Data subject to change without notice

Standard Brake Wheels—IC9516

DIMENSIONS (For Estimating Only)

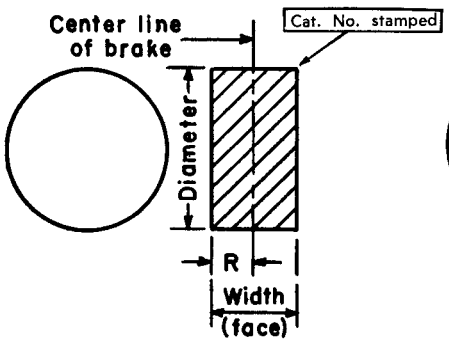

Fig. 28.

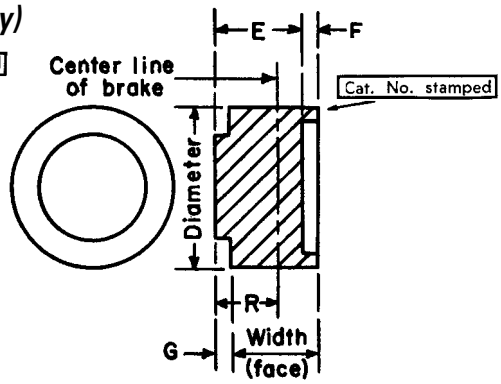

Fig. 29.

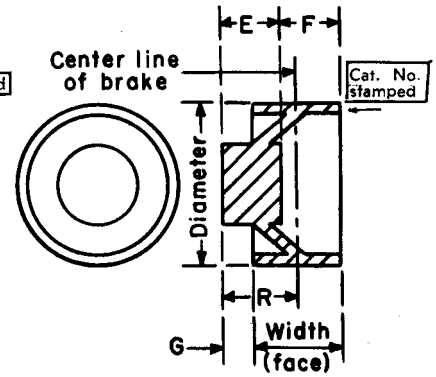

Fig. 30.

STANDARD BRAKE WHEELS WITH BLANK HUBS*

IC9516 Brake Form	Cat. No. Wheel without Bore and Keyway	Fig.	Approximate Wheel Dimensions in Inches							WK² Lb-Ft²	Weight in Lb
			Diameter	Width (Face)	E	F	G	R	Max Permissible Diameter of Straight Bore		
460	3860820XXPX	28	3 7/32	1 3/4	. . .	. . .	. . .	7/8	2	.037	3.0
161, 461	3860821XXPX	28	4 15/32	3	. . .	. . .	. . .	1 1/2	2 1/2	.237	10
161, 461	6960127XXPX	29	4 15/32	3	2 5/8	1	5/8	2 1/8	2	.237	10
462	3860822XXPX	29	5 3/4	3	3	3/4	3/4	2 1/4	2 1/2	.37	14
0863, 463	3860823XXPX	30	8	3 1/2	3 3/4	1/2	3/4	2 1/2	2 1/2	1.4	30
1164, 464	3860824XXPX	30	11	5	5	1 3/4	1 3/4	4 1/4	3 1/2	5.9	70
1164, 464	8077909XXPX	30	11	5	4	2 3/4	1 3/4	4 1/4	3	5.9	70
1465, 465	3860825XXPX	30	14	6 1/2	6	2	1 1/2	4 3/4	4 1/4	17.5	96
1966	3860826XXPX	30	19	8	6	4	2	6	5	62.0	220

*Blank hub brake wheels should be balanced, by customer, after boring prior to mounting on motor shaft.

NOMENCLATURE FOR BORE AND KEYWAY WHICH CAN BE FURNISHED ON ABOVE WHEELS

Add Bore Suffix to Blank Wheel Cat. No. ‡				Add Keyway Suffix to Blank Wheel Cat. No. and Bore Suffix‡					
Bore Dia. in Inches†	Suffix	Bore Dia. in Inches†	Suffix	Key Dimensions		Keyway Suffix	Keyway Dimensions		Keyway Suffix
				Width	Depth		Width	Depth	
1/2	YC	1 7/8	FF	3/16	3/32	P2	1/2	1/4	7
3/4	YG	2 1/8	HH	1/4	1/8	P3	5/8	5/16	9
7/8	YJ	2 3/8	KK	5/16	5/32	P4	3/4	3/8	10
1	YL	2 3/4	PP	3/8	3/16	P5	1	1/2	12
1 1/8	YP	3	SS						
1 1/4	YS	3 1/2	AB						
1 3/8	YV	3 3/4	AD						
1 1/2	AA	4	AF						
1 5/8	CC	4 1/4	AG						
1 3/4	EE	4 1/2	AH						

†Tolerances: Up to 3 inches (±0.0005); 3 inches and over (+ 0.000, −0.001).
‡EXAMPLE: 3860820YCP2 = 3 7/32-inch wheel with 1 7/8-inch bore and 3/16 × 3/32-inch keyway.

WHEELS WITH STRAIGHT BORE AND KEYWAY

IC9516 Brake Form	Wheel Catalog Number	Fig.	Approximate Wheel Dimensions in Inches								
			Diameter	Width (Face)	E	F	G	R	Bore	Keyway	
										Width	Depth
460	8205518P12	29	3 7/32	1 3/4	1 1/2	7/8	5/8	1 1/2	3/4	3/16	3/32
460	8205518P20	29	3 7/32	1 3/4	1 3/8	7/8	1/2	1 3/8	7/8	3/16	3/32
160, 460	233B333P2	29	3 7/32	1 3/4	2	3/8	5/8	1 1/2	7/8	3/16	3/32
161, 461	8205519P16	29	4 15/32	3	2 1/4	1 1/4	1/2	2	1 1/8	1/4	1/8
161, 461	8205519P17	29	4 15/32	3	2 15/16	1/8	1/16	1 9/16	1 1/4	1/4	1/8
161, 461	8205519P29	29	4 15/32	3	2	1 1/2	1/2	2	7/8	3/16	3/32
161, 461	8205519P37	29	4 15/32	3	1 3/4	1 1/4	. . .	1 1/2	1 1/8	1/4	1/8
161, 461	8205519P40	29	4 15/32	3	2 1/8	7/8	. . .	1 1/2	1 3/8	5/16	5/32
462	394B420P10	29	5 3/4	3	2 3/4	1 3/4	1 1/2	3	1 3/8	5/16	5/32
462	394B420P11	29	5 3/4	3	2 1/2	1/2	. . .	1 1/2	1 5/8	3/8	3/16
0863, 463	8205520P20	29	8	3 1/2	3	1 3/4	1 1/4	3	1 5/8	3/8	3/16

Data subject to change without notice

96TSB Thrustor-Operated Drum Brakes

The 96TSB brake is a rugged, AC Thrustor operated drum brake with torque ratings from 247 to over 7000 lb-ft ratings. They are constructed of steel plate, with twin brake shoe arms.

These brakes are designed to be used on bridges, hoists, conveyors, rolling mill drives and other heavy duty applications, in which a reliable, long lasting brake is required. They can be used as a holding, stopping or retarding brake. Standard features of the 96TSB brake are: spring set-thrustor release, torque spring tube, auto pad wear compensator, treated metal parts, and maintenance free bushings. Optional features are limit switches for brake position and for lining wear, and manual release handle. Setting and release times are as shown in note 10.

Braking torque is easily adjustable down to 50% of rated torque.

High inertia loads offer ideal applications for these Thrustor brakes, because of their ability to smoothly apply and release braking pressure.

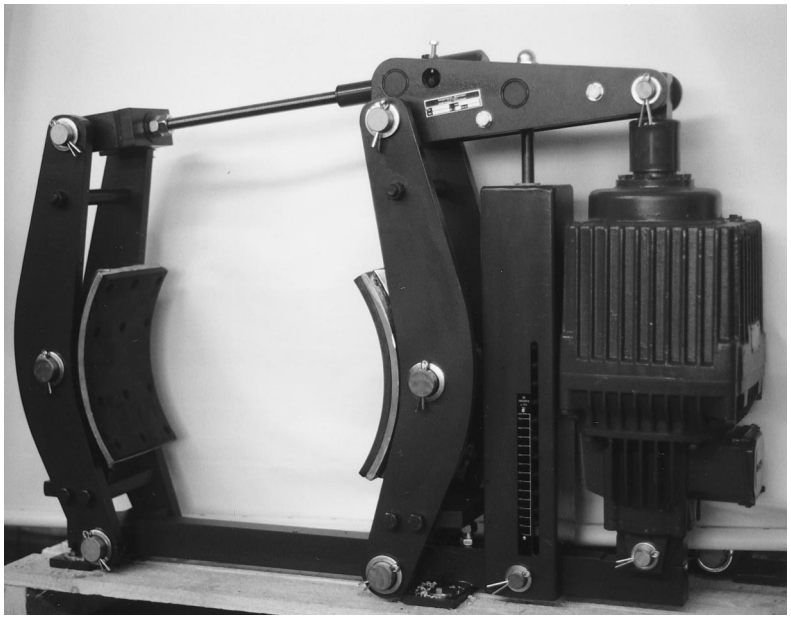

96TSB THRUSTOR OPERATED DRUM BRAKES

Torque Rating		Brake		Drum with St. Bore Hub					
					Drum size		Max shaft		Max speed
Lb Ft	Nm	Brake Cat No.*		Drum Cat. No.†	inch	mm	mm	in.	rpm
		Note #1,#2,#3		#4,#5,#6	#5	#5	#7	#7	
245	335	**96TSB 250x23 CAA 4**		**96TSW 250 yyzz**	9.8	250	62	2.4	2320
315	430	**96TSB 315x23 CAA 4**		**96TSW 315 yyzz**	12.4	315	80	3.1	2890
325	445	**96TSB 250x30 CAA 4**		**96TSW 250 yyzz**	9.8	250	62	2.4	2320
435	590	**96TSB 315x30 CAA 4**		**96TSW 315 yyzz**	12.4	315	80	3.1	2890
410	560	**96TSB 400x30 CAA 4**		**96TSW 400 yyzz**	15.7	400	90	3.5	2890
625	850	**96TSB 250x50 CAA 4**		**96TSW 250 yyzz**	9.8	250	62	2.4	2320
810	1100	**96TSB 315x50 CAA 4**		**96TSW 315 yyzz**	12.4	315	80	3.1	2890
850	1155	**96TSB 400x50 CAA 4**		**96TSW 400 yyzz**	15.7	400	90	3.5	2890
1050	1420	**96TSB 500x50 CAA 4**		**96TSW 500 yyzz**	19.7	500	100	3.23	2600
1315	1785	**96TSB 315x80 CAA 4**		**96TSW 315 yyzz**	12.4	315	80	3.1	2890
1330	1805	**96TSB 400x80 CAA 4**		**96TSW 400 yyzz**	15.7	400	90	3.5	2890
1630	2220	**96TSB 500x80 CAA 4**		**96TSW 500 yyzz**	19.7	500	100	3.9	2600
2060	2800	**96TSB 400x121 CAA 4**		**96TSW 400 yyzz**	15.7	400	90	3.5	2890
2525	3425	**96TSB 500x121 CAA 4**		**96TSW 500 yyzz**	19.7	500	100	3.9	2600
2525	3430	**96TSB 630x121 CAA 4**		**96TSW 630 yyzz**	24.8	630	110	4.3	2060
2990	3920	**96TSB 710x121 CAA 4**		**96TSW 710 yyzz**	28	710	106	4.9	2060
3980	5405	**96TSB 500x201 CAA 4**		**96TSW 500 yyzz**	19.7	500	100	3.9	2600
4230	5740	**96TSB 630x201 CAA 4**		**96TSW 630 yyzz**	24.8	630	110	4.3	2060
4800	6530	**96TSB 710x201 CAA 4**		**96TSW 710 yyzz**	28	710	125	4.9	2060
6280	8520	**96TSB 630x301 CAA 4**		**96TSW 630 yyzz**	24.8	630	110	4.3	2060
7150	9700	**96TSB 710x301 CAA 4**		**96TSW 710 yyzz**	28	710	125	4.9	2060

* Notes

1 Catalog number for brake includes type (96TSB), size, form (note #2), voltage (note #3)
2 Form: Axx = Open brake, Cxx = open with auto wear comp., Dxx = dripproof encl.
xAx = no options, xBx = hand release lever, xCx = hand rel. with limit sw., xDx = hand rel. with 2 limit sw.,
xxA = std Lf. hand mtd., xxB = std. Rt. hand mtd, xxS = space heaters - Lf hand mtd.
3 AC operating voltage: 4 = 460V, 3ph, 60Hz., 3 = 380v, 3ph, 50Hz, 5 = 575v, 60Hz.
4 Catalog number for steel drum includes type (96TSW), size (note #5), bore/keyway (note #6)
5 Drum diam. in mm and inches.
6 Letters "yy" defines bore size (see note 7) and "zz" defines keyway. Specify at time of order.
7 Max. hub diameter in mm and inches. Refer to GE for larger hub sizes.
8 Release and setting times are: 96TSB____30 = 0.4/0.4 sec.; 96TSB____50 = 0.5/0.4 sec.; 96TSB____80 = 0.4/0.4 sec.

96TSB Thrustor-Operated Drum Brakes

OUTLINE—OPEN BRAKE

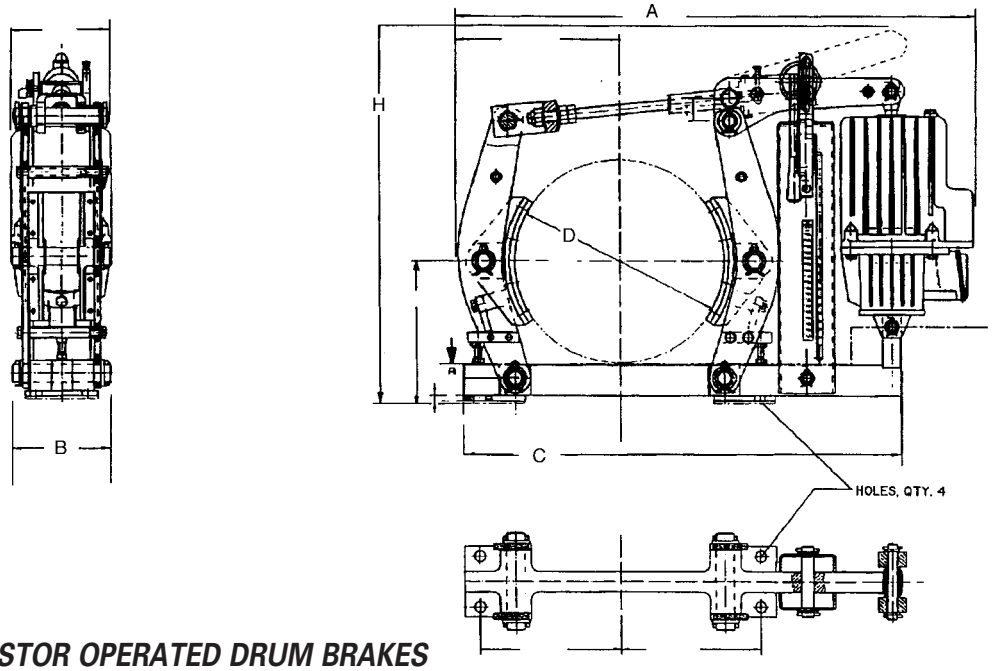

96TSB THRUSTOR OPERATED DRUM BRAKES

Torque Rating		Brake Type / Brake Cat No.	Dimensions				
LB Ft	Nm		A	B	C	D	H
245	335	**96TSB 250x23 CAA 4**	29.5	6.3	25.8	9.8	22.4
315	430	**96TSB 315x23 CAA 4**	33.3	6.3	28.8	12.4	24.8
325	445	**96TSB 250x30 CAA 4**	29.5	6.3	25.8	9.8	22.4
435	590	**96TSB 315x30 CAA 4**	33.3	6.3	28.8	12.4	24.8
410	560	**96TSB 400x30 CAA 4**	38.0	7.1	34.4	15.7	27.6
625	850	**96TSB 250x50 CAA 4**	30.9	7.7	25.8	9.8	22.4
810	1100	**96TSB 315x50 CAA 4**	34.6	7.7	28.8	12.4	24.8
850	1155	**96TSB 400x50 CAA 4**	39.6	7.7	34.4	15.7	27.6
1050	1420	**96TSB 500x50 CAA 4**		9.5	40.9	19.7	
1315	1785	**96TSB 315x80 CAA 4**	34.6	7.7	28.8	12.4	24.8
1330	1805	**96TSB 400x80 CAA 4**	39.6	7.7	34.4	15.7	27.6
1630	2220	**96TSB 500x80 CAA 4**	46.6	9.5	40.9	19.7	33.1
2060	2800	**96TSB 400x121 CAA 4**	40.9	9.5	34.4	15.7	27.6
2525	3425	**96TSB 500x121 CAA 4**	46.3	9.5	40.9	19.7	33.1
2525	3430	**96TSB 630x121 CAA 4**	52.4	11.6	47.1	24.8	40.0
2990	3920	**96TSB 710x121 CAA 4**	57.7	12.6	52.6	27.9	43.9
3980	5405	**96TSB 500x201 CAA 4**	46.3	9.5	40.9	19.7	33.1
4230	5740	**96TSB 630x201 CAA 4**	52.4	11.6	47.1	24.8	40.0
4800	6530	**96TSB 710x201 CAA 4**	52.4	12.6	52.6	27.9	43.9
6280	8520	**96TSB 630x301 CAA 4**	52.4	11.6	47.1	24.8	40.0
7150	9700	**96TSB 710x301 CAA 4**	57.7	12.6	52.6	27.9	43.9

OUTLINE—DRIPTIGHT ENCLOSURE

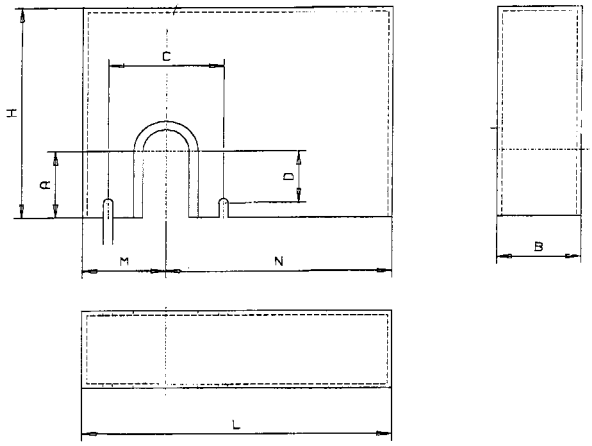

Brake type	A	B	C	D	H	L	M	N
96TSB250	6.9	8.5	9.8	5.9	23.2	32.1	9.1	23.0
96TSB315	8.3	8.5	12.4	7.5	25.2	35.8	11.0	24.8
96TSB400/50	11.0	8.5	15.7	9.1	28.7	40.7	12.8	27.9
96TSB400/121	11.0	10.2	15.7	9.1	32.9	42.1	13.2	28.9
96TSB500	12.4	10.2	19.7	11.4	32.9	47.8	15.3	31.9
96TSB830	15.6	12.6	24.8	13.9	40.1	53.5	18.9	34.6
96TSB710	17.1	13.8	27.9	15.3	44.1	58.9	21.1	37.8

Data subject to change without notice

96SBM Solenoid-Operated Disc Brakes for Material Handling Applications

45 lb ft to 550 lb ft rating

The 96SBM is a rugged, compact solenoid-operated disc brake available in torque ratings from 45 lb-ft (60Nm) to 550 lb-ft (750Nm). Ratings depend upon the diameter of the disc. The brake is designed primarily for pedestal or floor mounting.

Stainless steel bolts and close-tolerance, self-lubricating, maintenance-free bushings are used to keep maintenance requirements low. Brake pad thickness monitoring and brake pad replacement can be accomplished with a minimum of time and effort. Brake pads are asbestos free. The stopping torque is field adjusted down to 50% of full load rating.

An optional rectifier/economizer, type 96SBB, can be provided for operation from ac control power. The economizer converts ac to dc as well as acts as an economizer.

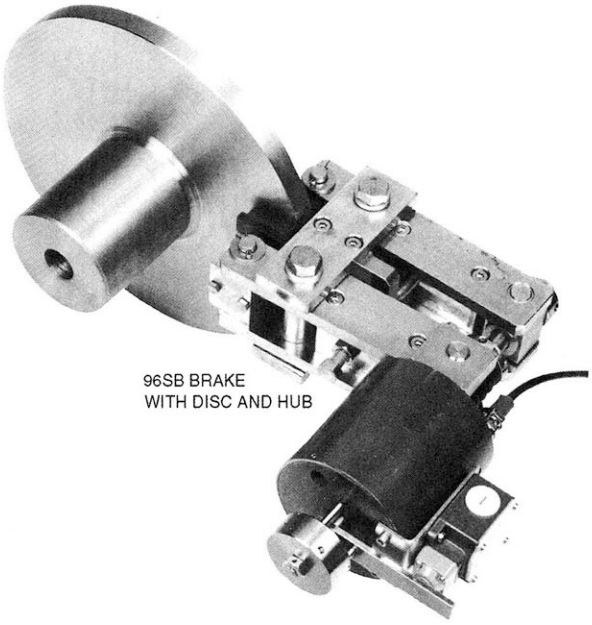

96SB BRAKE
WITH DISC AND HUB

FEATURES

- Compact size
- Treated metal parts and stainless-steel bolts for longer life
- Self-lubricating bushings
- Standard manual release
- Easily replaceable brake pads

OPTIONAL FEATURES AVAILABLE

- Brake pad wear limit switches
- Brake disc with hubs
- Brake Enclosures
- Rectifier/economizer module for ac power

SOLENOID-OPERATED DISC BRAKES FOR MATERAL HANDLING APPLICATIONS

Torque LB Ft	Brake		Disc with Straight Bore Hub					
			Hub & Disc Catalog No.	Disc size		Max shaft diam		Max speed
	Brake Cat No.*			inch	mm	inch	mm	rpm
	Note #1,#2,#3,#4,#5		Note #6	#7	#7	#9	#9	#6
45	**96SBMX1711ASA2D**		**96SN64X200**	8	200	1.62″	42mm	3500
52	**96SBMX1711ASA2D**		**96SN64X225**	9	225	1.62″	42mm	3300
63	**96SBMX1711ASA2D**		**96SN64X250**	10	250	1.62″	42mm	3000
74	**96SBMX1711ASA2D**		**96SN64X280**	11	280	1.62″	42mm	2675
85	**96SBMX1711ASA2D**		**96SN64X315**	12.5	315	1.62″	42mm	2380
96	**96SBMX1712ASC2D**		**96SN64X200**	8	200	1.62″	42mm	3500
110	**96SBMX1712ASC2D**		**96SN64X225**	9	225	1.62″	42mm	3300
125	**96SBMX1712ASC2D**		**96SN64X250**	10	250	1.62″	42mm	3000
144	**96SBMX1712ASC2D**		**96SN64X280**	11	280	1.62″	42mm	2675
166	**96SBMX1712ASC2D**		**96SN64X315**	12.5	315	1.62″	42mm	2380
185	**96SBMX1713ASC2D**		**96SN84X250**	10	250	2.17″	55mm	3000
210	**96SBMX1713ASC2D**		**96SN84X280**	11	280	2.17″	55mm	2675
244	**96SBMX1713ASC2D**		**96SN84X315**	12.5	315	2.17″	55mm	2380
277	**96SBMX1713ASC2D**		**96SN84X355**	14	355	2.17″	55mm	2100
321	**96SBMX1713ASC2D**		**96SN84X400**	16	400	2.17″	55mm	1875
369	**96SBMX1733ASC2D**		**96SN92X355**	14	355	2.36″	60mm	2100
428	**96SBMX1733ASC2D**		**96SN92X400**	16	400	2.36″	60mm	1875
490	**96SBMX1733ASC2D**		**96SN92X450**	18	450	2.36″	60mm	1650
550	**96SBMX1733ASC2D**		**96SN92X500**	20	500	2.36″	60mm	1500

96BB17041 - brake rectifier/economizer -1 phase ac input.
96BB17141 - brake rectifier/economizer -3 phase ac input.

*Brake Catalog number represents: Type=first 10 characters, Form=next 3 characters, Volts=next 2 characters.
Instruction Book.....GEH-6166

1 Catalog number is type number plus form letters (Note 4) plus voltage (Note 5)
2 Hub and Disc is separate number to right
3 96SBM brakes are dc solenoid operated. For ac operation, uses optional 96BB17 type rectifier panel.
4 Brake Forms: ASA: Axx = (open- no enclosure), xSx = (brake released limit sw.), xxA (std. left hand solenoid mtd.)
Brake Forms: ASC = basic form of 1712,13,33 includes: Axx (open, manual release knob,), xSx (brake released limit sw.) xxC (special connector, longer cable and cable conduit)
5 Control voltages: 1D = 90vdc, 2D = 115vdc, 3D = 180vdc, 4D = 205vdc, 5D = 230vdc
6 Hub and disc catalog number (specify shaft and keyway dimensions at time of order)
7 Dimension is disc diameter in inches or mm.
9 Max. shaft diameter, in mm or inches.
10 Inrush/holding current: 1711 - .18/.18 amps no forcing, 1712 - .70/.18 amps, 1733 - 1.04/.24 amps
11 Brake release time 0.5 to 2.0 sec.

96SBM Solenoid-Operated Disc Brakes for Material Handling Applications

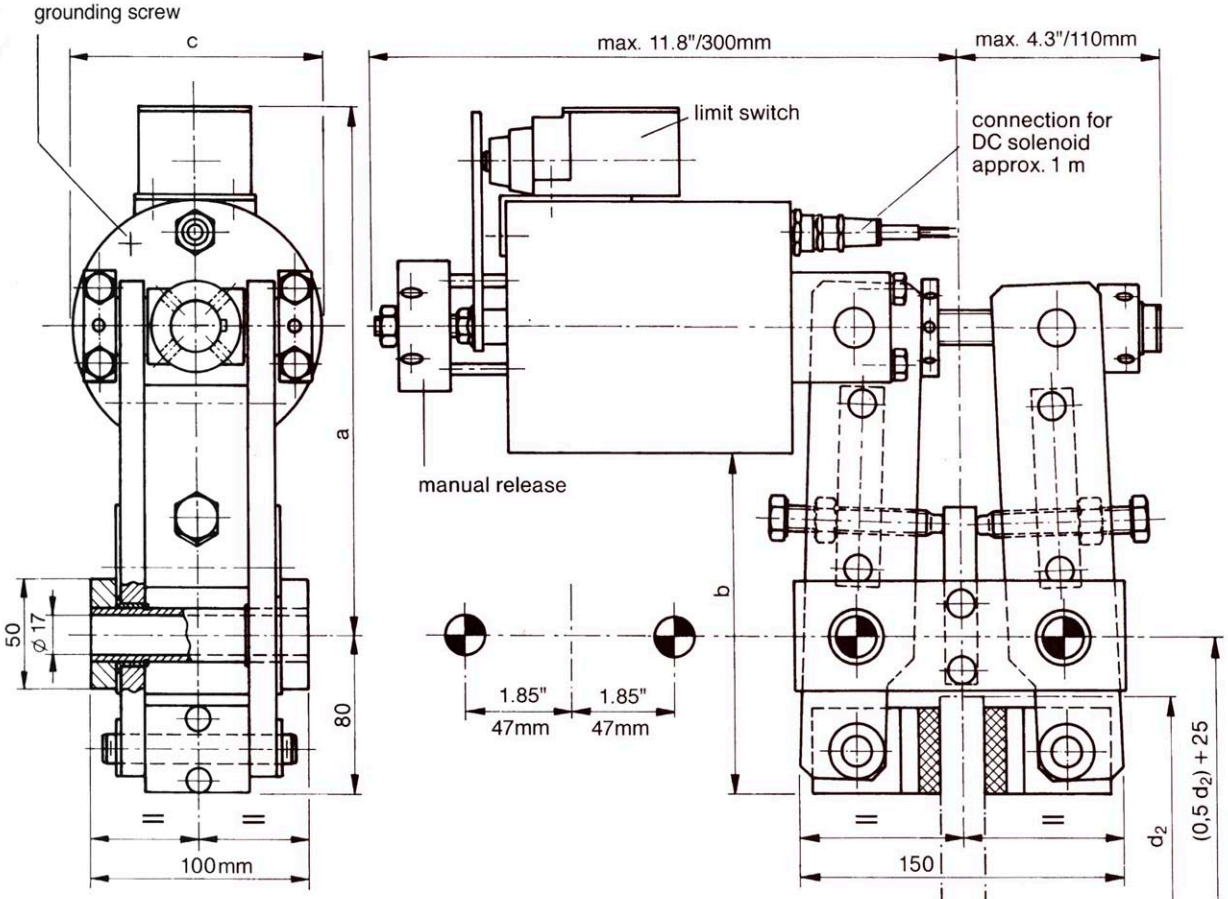

d_2 = brake disc diameter

d_2 – 120 mm = max. possible hub or coupling diameter

◐ mounting holes for screws

Torque Ratings – Disc Diameter

brake disc Ø d_2, inches	8	9	10	11	12.5	14	16	18	20	dimensions depending on solenoid in/mm			
brake disc Ø d_2, mm	200	225	250	280	315	355	400	450	500				
brake model - torque	braking torque, lb-ft/Nm									a	b	c	WT** lb
96SBM1711 lb-ft/Nm	45/60	52/70	63/85	74/110	85/115					9.6/245	6.1/155	4.5/114	45
96SBM1712* lb-ft/Nm	96/130	110/150	125/170	144/195	168/225					9.6/245	6.1/155	4.5/114	45
96SBM1713* lb-ft/Nm			185/250	210/285	244/330	277/375	321/435			9.6/245	6.1/155	4.5/114	45
96SBM1733* lb-ft/Nm						369/500	428/580	490/665	552/750	10/255	5.9/150	5.3/134	53

**Weight in lb including solenoid, but without economizer.

*Solenoid is forced when releasing. The brake is equipped with limit switch for economy switch-over and monitoring of release.

96USK Solenoid-Operated Disc Brakes for Heavy Duty Industrial Applications

The 96USK is a rugged, compact solenoid-operated disc brake available in torque ratings from 94 lb-ft (130Nm) to 2475 lb-ft (3360Nm). Ratings depend upon the diameter of the disc.

Stainless steel bolts and close-tolerance, self-lubricating, maintenance-free bushings are used to keep maintenance requirements low. Brake pad thickness monitoring and brake pad replacement can be accomplished with a minimum of time and effort. Brake pads are asbestos free. The stopping torque is field adjusted down to 50% of full load rating.

An optional rectifier/economizer, can be provided for operation from ac control power. The economizer converts ac to dc as well as acts as an economizer.

Brake discs are between .5″ and 1″ thick and are available from 8″ (200mm) to 47″ (1200mm) in diameter.

FEATURES

- Compact size
- Automatic lining wear compensation
- Treated metal parts and stainless steel bolts for longer life
- Self-lubricating bushings
- Easy installation
- Adjustable torque rating
- Light weight
- Easily replaceable brake pads

OPTIONAL FEATURES AVAILABLE

- Brake discs with hubs
- Rectifier/economizer module for ac power
- Manual release devices

94 lb ft to 2475 lb ft rating

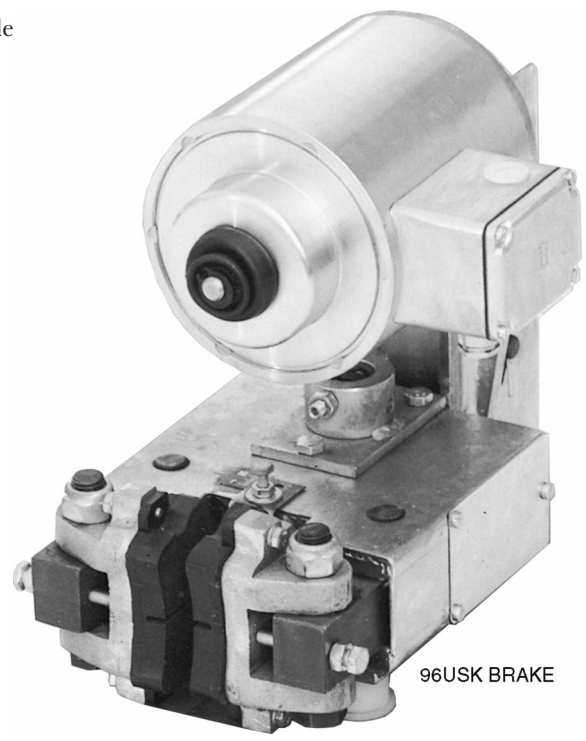

96USK BRAKE

BRAKES

96USK SOLENOID-OPERATED DISC BRAKES

Torque		Brake		Disc with straight bore Hub				
				St. Bore-Disc	Disc size	Max. Shaft Diam		Max.
LB Ft	Nm	Brake Catalog Number*		Disc and Hub Cat No.	mm	mm	inch	Motor speed
Note #1	#1	#2,#3, #4, #5, #6		#7, #8	#7	#9	#9	rpm
188	255	**96USK 4M13 X1 CAA 4A**		**96UBS1 200 yyzz**	200	50	2.0	
250	340	**96USK 4M13 X2 CAA 4A**		**96UBS1 250 yyzz**	250	60	2.4	
335	455	**96USK 4M13 X3 CAA 4A**		**96UN14Y 315 yyzz**	315	60	2.4	9200
440	600	**96USK 4M13 X4 CAA 4A**		**96UN14Y 400 yyzz**	400	60	2.4	9200
565	770	**96USK 4M13 X5 CAA 4A**		**96UN29Y 500 yyzz**	500	82	3.2	7640
733	955	**96USK 4M13 X6 CAA 4A**		**96UN29Y 630 yyzz**	630	106	4.2	7640
835	1135	**96USK 4M13 X7 CAA 4A**		**96UN67Y 710 yyzz**	710	106	4.2	6070
950	1290	**96USK 4M13 X8 CAA 4A**		**96UN130Y 800 yyzz**	800	130	5.1	4770
1075	1460	**96USK 4M13 X9 CAA 4A**		**96UN130Y 900 yyzz**	900	130	5.1	4770
1200	1630	**96USK 4M13 X10 CAA 4A**		**96UN200Y 1000 yyzz**	1000	165	6.5	1300
1355	1840	**96USK 4M13 X11 CAA 4A**		**96UN200Y 1120 yyzz**	1120	165	6.5	1300
1548	2100	**96USK 4M16 X8 CAA 4A**		**96UN200Y 800 yyzz**	800	165	6.5	1300
1754	2380	**96USK 4M16 X9 CAA 4A**		**96UN200Y 900 yyzz**	900	165	6.5	1300
1960	2660	**96USK 4M16 X10 CAA 4A**		**96UN200Y 1000 yyzz**	1000	165	6.5	1300
2207	2995	**96USK 4M16 X11 CAA 4A**		**96UN200Y 1120 yyzz**	1120	165	6.5	1300
2475	3360	**96USK 4M16 X12 CAA 4A**		**96UN200Y 1200 yyzz**	1200	165	6.5	1300

*See notes below

1 Torque is based on time duty cycle of “5 seconds on per minute”. Reduced torque rating for “100% on time” and requires forcing circuit.
2 Brake catalog number is type “(96USK) plus size (4M13×7)” plus form letters (Note 5) plus voltage number (Note 6)
3 Hub and disc catalog number is separate number at right
4 Type catalog number. Mounting pedestal or mounting bracket not included. Rectifier not included.
5 Form/option Axx = Open brake, Cxx = open with auto wear comp., Dxx = dripproof encl., xAx = no options, xBx = hand rel., xCx = hand release with limit switch, xSx = 1 limit sw only, xxA = std mtd.
6 Control voltage. 96USK brakes are dc solenoid operated. For ac operation, uses optional rectifier panel. Control voltages: 1D = 90vdc, 3D = 180vdc, 4D = 205 vdc, 1A = 120vac-1ph, 2A = 230vac-1ph., 4A = 460vac-3ph. (ac operation includes optional rectifier panel)
7 Disc size, dimension is disc diameter in mm.
8 Letters “yy” defines bore size and “zz” defines keyway. Specify dimensions at time of order.
9 Max. shaft diameter, in mm or inches. For larger motor shaft sizes, refer to Company

96USK Solenoid-Operated Disc Brakes

DIMENSIONS—96USK Brake (without mounting base or pedestal—see below)

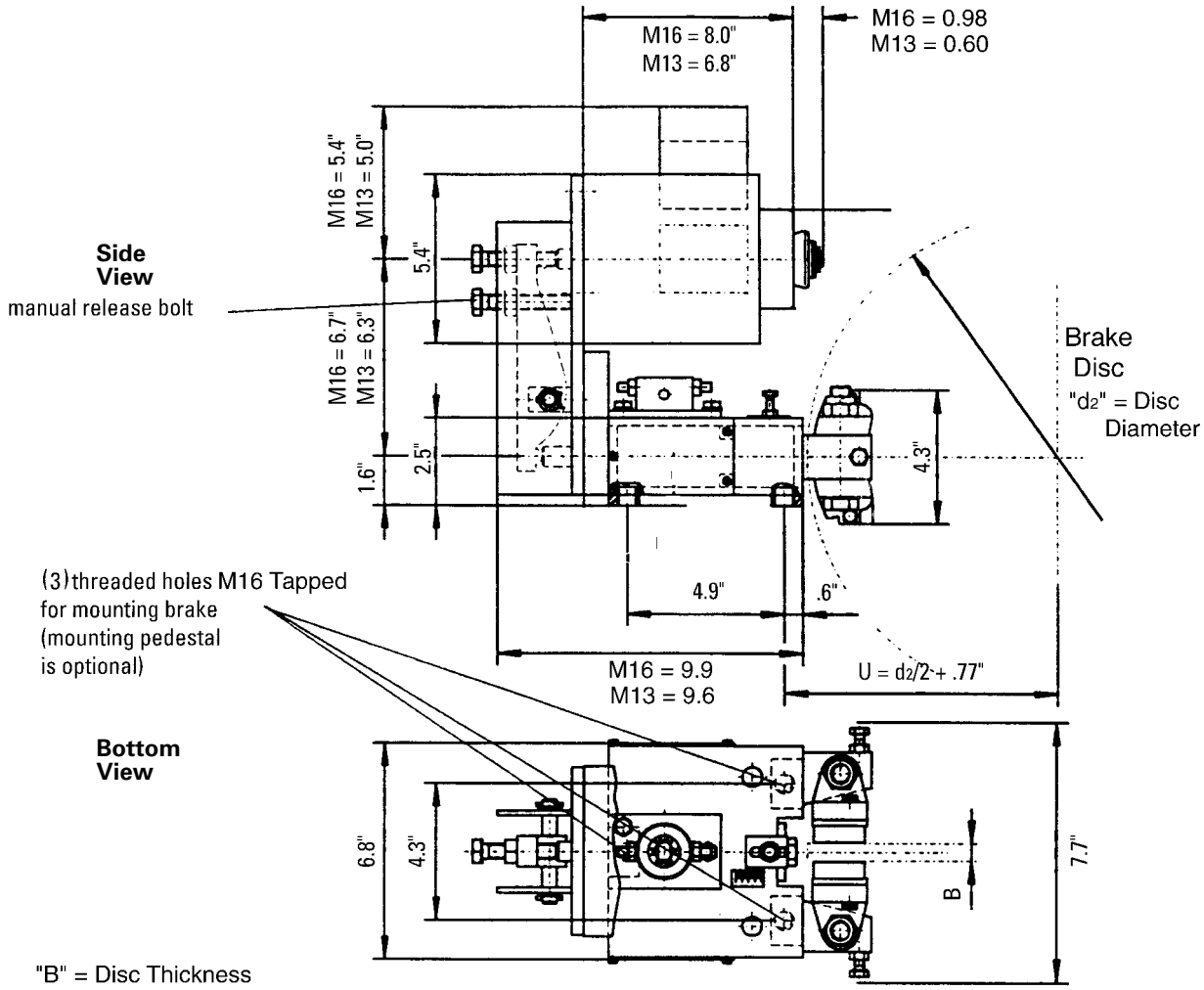

MOUNTING ARRANGEMENTS

Brake with Optional Mounting Pedestal refer to GE for mounting dimensions

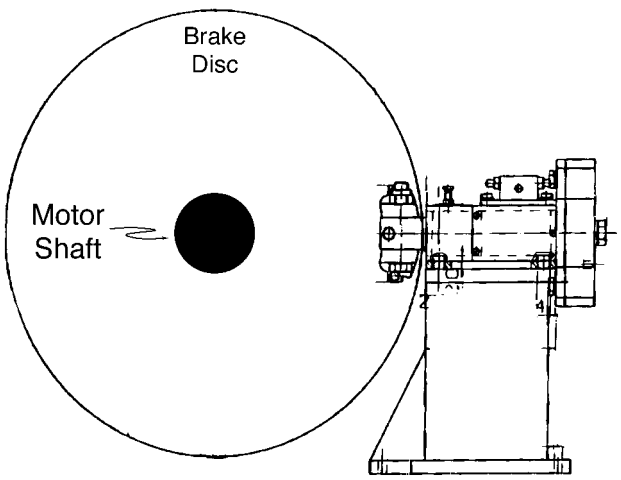

Brake with Optional Floor Mounting Bracket refer to GE for mounting dimensions

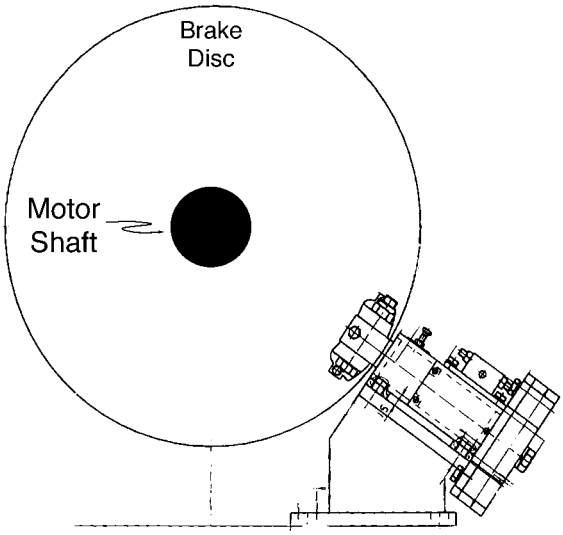

Data subject to change without notice

96USB AC Thrustor-Operated Disc Brake For Heavy Industrial Applications

200 lb ft to 23,470 lb ft rating

The 96USB is a rugged, ac thrustor operated disc brake with torque ratings from 200 lb-ft (270 Nm) to 23470 lb-ft (31,850 Nm). The torque rating depends upon the size of the thrustor and the diameter of the disc. The brake is designed to be used on cranes, hoists, conveyors, rolling mill drives or other heavy industrial type applications in which a reliable, long lasting brake is required. It can be used very effectively as either a holding, stopping or retarding brake.

Stainless steel bolts and close-tolerance, self-lubricating, maintenance-free bushings are used to keep maintenance requirements low. Brake pad thickness monitoring and brake pad replacement can be accomplished with a minimum of time and effort. Brake pads are asbestos free. The stopping torque is field adjusted down to 50% of full load rating.

The brake is spring set, so removal or loss of power causes the brake to set and stop the motor or driven load. Spring release power is provided by the electro-hydraulic thrustor.

Maximum motor endplay is ±1 mm.

FEATURES

- Compact size
- Treated metal parts and stainless-steel bolts for longer life
- Close-tolerance, self-lubricating bushings
- Easy installation
- Adjustable torque rating
- Standard manual release
- Square spring tube with scale to ease torque setting
- Easily replaceable brake shoes

OPTIONAL FEATURES

- Brake pad wear limit switches
- Brake discs with hubs

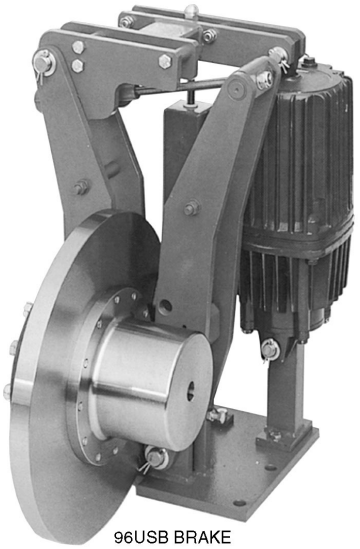

96USB BRAKE
WITH DISC AND HUB

BRAKES

AC Thrustor Brakes

Torque Rating		Brake		Disc with St. Bore Hub				
				Disc and Hub Cat No.	Disc size	Max shaft	Max shaft	Max speed
LB Ft	Nm	Brake Cat No.*			mm	mm	in.	
		#1,#2, #3, #4, #5		#6, #7, #8	#7	#9	#9	rpm
400	550	**96USB31 F30 CAA 4**		**96UN14X 315 yyzz**	315	62	2.4	4120
500	690	**96USB31 G30 CAA 4**		**96UN14X 355 yyzz**	355	62	2.4	3660
700	950	**96USB31 J30 CAA 4**		**96UN14X 450 yyzz**	450	62	2.4	2890
890	1210	**96USB31 L30 CAA 4**		**96UN29X 560 yyzz**	560	82	3.2	2320
1000	1380	**96USB31 M30 CAA 4**		**96UN67X 630 yyzz**	630	106	4.2	2060
1170	1590	**96USB31 N30 CAA 4**		**96UN67X 710 yyzz**	710	106	4.2	2060
1490	2020	**96USB31 J50 CAA 4**		**96UN14X 450 yyzz**	450	62	2.4	2890
1660	2260	**96USB31 K50 CAA 4**		**96UN29X 500 yyzz**	500	82	3.2	2600
1890	2560	**96USB31 L50 CAA 4**		**96UN29X 560 yyzz**	560	82	3.2	2320
1615	2190	**96USB31 G80 CAA 4**		**96UN14X 355 yyzz**	355	62	2.4	3660
1920	2610	**96USB31 H80 CAA 4**		**96UN14X 400 yyzz**	400	62	2.4	3250
2210	3000	**96USB31 J80 CAA 4**		**96UN14X 450 yyzz**	450	62	2.4	2890
3200	4350	**96USB31 M80 CAA 4**		**96UN67X 630 yyzz**	630	106	4.2	2060
3700	5020	**96USB31 N80 CAA 4**		**96UN67X 710 yyzz**	710	106	4.2	2060
4380	5950	**96USB32 P80 CAA 4**		**96UN130X 800 yyzz**	800	130	5.1	1620
5570	7560	**96USB32 S80 CAA 4**		**96UN200X 1000 yyzz**	1000	165	6.5	1300
7860	10670	**96USB32 R121 CAA 4**		**96UN130X 900 yyzz**	900	130	5.1	1440
8860	12020	**96USB32 S121 CAA 4**		**96UN200X 1000 yyzz**	1000	165	6.5	1300
12200	16550	**96USB33 R201 CAA 4**		**96UN130X 900 yyzz**	900	130	5.1	1440
13750	18650	**96USB33 S201 CAA 4**		**96UN200X 1000 yyzz**	1000	165	6.5	1300
18500	25100	**96USB33 S301 CAA 4**		**96UN200X 1000 yyzz**	1000	165	6.5	1300
23470	31850	**96USB33 T301 CAA 4**		**96UN200X 1250 yyzz**	1250	165	6.5	RTC

1 Catalog number is type (96USB31) plus size number (Note 3) plus form letters (Note 4) plus voltage number (Note 5)
2 Disc and Hub is separate number to right
3 Thrustor size
4 Form Axx = Open brake, Cxx = open with auto wear comp., xAx = no options, xBx = hand rel. xCx = hand rel. with limit sw., xDx = hand rel. with 2 limit sw., xxA = std mtd.
5 AC operating voltage: 4= 460V, 3ph, 60Hz.; 3 = 380v, 3ph, 50hz.; 2= 230V, 3ph, 60hz
6 Hub and disc catalog number is type (96UN14X), plus size (note 7), plus bore and keyway (note 8)
7 Disc diam. in mm.
8 Letters "yy" defines bore size (see note 9) and "zz" defines keyway. Specify dimensions at time of order.
9 Max. shaft diameter in mm and inches. Refer to GE for larger hub sizes.
10 Release and setting times are: 96USB31X30: release = 0.4 sec/setting = 0.4 sec;
USB31x50: release = 0.5 sec/setting = 0.4 sec: USB32x 80: release = 0.4 sec/setting = 0.4 sec.
USB32x121: release = 0.4 sec/setting = 0.5 sec; USB33x201 release = 0.6 sec/setting = 0.4 sec.

Instruction Book.....GEH-6368

96USB AC Thrustor-Operated Disc Brake

PARTS

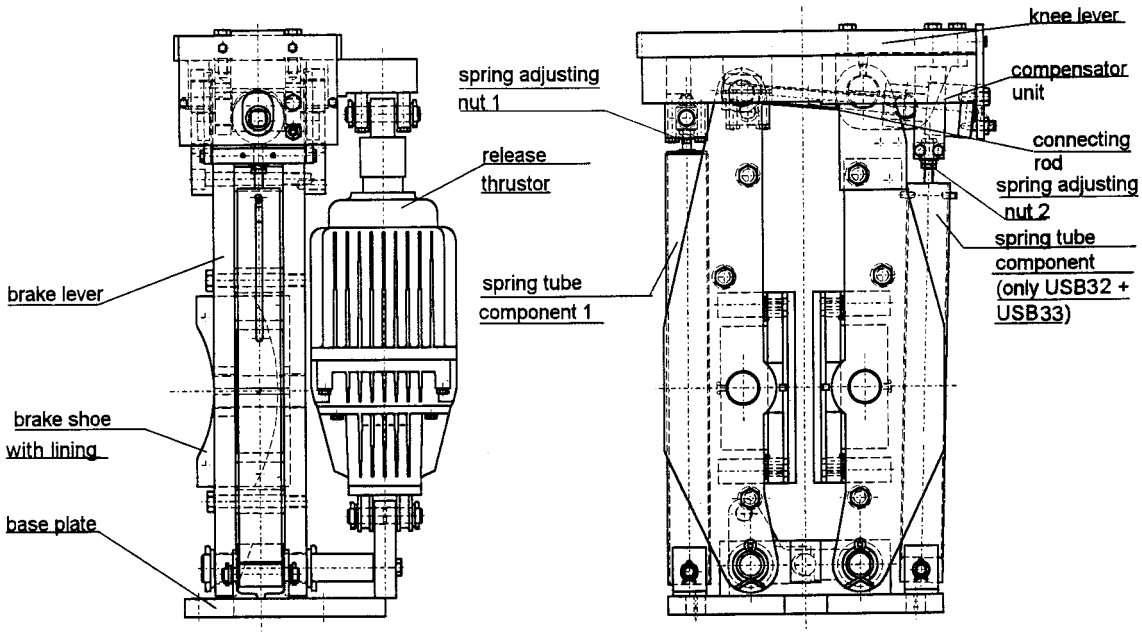

DIMENSIONS—96USB31,32,33 BRAKES

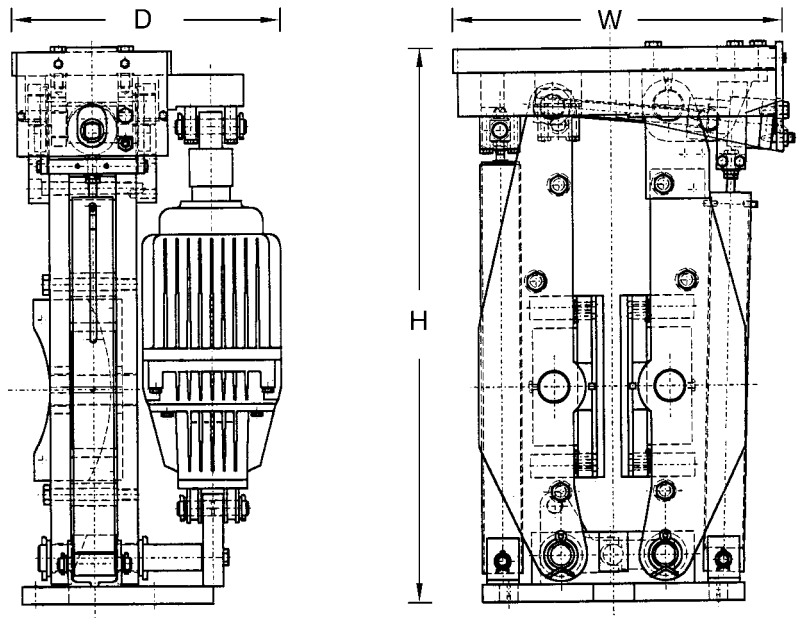

Brake Type	Height H	Width W	Depth D
96USB31-30	24.0 (611 MM)	14.7 (373 MM)	12.2 (310 MM)
96USB31-50	24.0 (611 MM)	14.7 (373 MM)	12.7 (322 MM)
96USB31-80	24.0 (611 MM)	14.7 (373 MM)	12.7 (322 MM)
96USB32-80	36.6 (930 MM)	19.2 (488 MM)	16.9 (430 MM)
96USB32-121	36.6 (930 MM)	19.2 (488 MM)	17.8 (452 MM)
96USB33-201	37.8 (960 MM)	23.2 (590 MM)	18.2 (462 MM)

Data subject to change without notice

96USK-P Pneumatic Caliper Disc Brake For Industrial Applications

The 96USK-P brakes are spring set, pneumatic released brakes, designed to be used on cranes, conveyors, rolling mill drives and other heavy duty applications, in which reliable, long lasting brakes are required. They can be used as holding or stopping brakes. Standard features of the 96USK-P brakes are: spring set-pneumatic release, auto pad wear compensator and self-lubricated bushings.

Optional features are limit switches for brake position or lining wear and mounting bracket or pedestal. Nominal operating pressure is 6 or 7 bars.

Pneumatic Caliper Disc Brakes

Brake							Disc with St. Bore Hub				
Torque Rating LB Ft	Nm	Basic brake		Basic with pneu. valve and floor bkt.		Basic with pneu. valve and pedestal	Type & Cat. No.	Disc size	Max shaft diam	Max shaft diam	Max motor speed
		Brake Cat No.*					Disc and Hub Cat No.	mm	mm	in.	
		Note #1,#2,#3,#4		#4,#5,#6		#4,#5,#6	#6,#7,#8	#7	#9	#9	rpm
325	440	**96USK4PE 1 CAA**	or	**CVB**	or	**CVP**	**96UN 14Y 200 yyzz**	200	62	2.4	4120
435	590	**96USK4PE 2 CAA**	or	**CVB**	or	**CVP**	**96UN 14Y 250 yyzz**	250	62	2.4	4120
575	780	**96USK4PE 3 CAA**	or	**CVB**	or	**CVP**	**96UN 14Y 315 yyzz**	315	62	2.4	4120
760	1035	**96USK4PE 4 CAA**	or	**CVB**	or	**CVP**	**96UN 14Y 400 yyzz**	400	62	2.4	3250
980	1330	**96USK4PE 5 CAA**	or	**CVB**	or	**CVP**	**96UN 29Y 500 yyzz**	500	82	3.2	2600
							96UN 67Y 500 yyzz	500	106	4.2	2600
1265	1715	**96USK4PE 6 CAA**	or	**CVB**	or	**CVP**	**96UN 67Y 630 yyzz**	630	106	4.2	2060
1435	1950	**96USK4PE 7 CAA**	or	**CVB**	or	**CVP**	**96UN 67Y 710 yyzz**	710	106	4.2	2060
							96UN 130Y 710 yyzz	710	106	5.1	2060
1620	2200	**96USK4PE 8 CAA**	or	**CVB**	or	**CVP**	**96UN 130Y 800 yyzz**	800	130	5.1	1620
1855	2515	**96USK4PE 9 CAA**	or	**CVB**	or	**CVP**	**96UN 130Y 900 yyzz**	900	130	5.1	1440
2075	2810	**96USK4PE 10 CAA**	or	**CVB**	or	**CVP**	**96UN 200Y 1000 yyzz**	1000	165	6.5	1300
2120	2880	**96USK4PD 8 CAA**	or	**CVB**	or	**CVP**	**96UN 130Y 800 yyzz**	800	130	5.1	1620
2380	3230	**96USK4PD 9 CAA**	or	**CVB**	or	**CVP**	**96UN 130Y 900 yyzz**	900	130	5.1	1440
2810	3810	**96USK4PD 10 CAA**	or	**CVB**	or	**CVP**	**96UN 200Y 1000 yyzz**	1000	165	6.5	1300
935	1270	**96USK5PE 3 CAA**	or	**CVB**	or	**CVP**	**96UN 14Y 315 yyzz**	315	62	2.4	4120
1240	1680	**96USK5PE 4 CAA**	or	**CVB**	or	**CVP**	**96UN 14Y 400 yyzz**	400	62	2.4	3250
1600	2160	**96USK5PE 5 CAA**	or	**CVB**	or	**CVP**	**96UN 29Y 500 yyzz**	500	82	3.2	2600
2050	2780	**96USK5PE 6 CAA**	or	**CVB**	or	**CVP**	**96UN 67Y 630 yyzz**	630	106	4.2	2060
2330	3160	**96USK5PE 7 CAA**	or	**CVB**	or	**CVP**	**96UN 67Y 710 yyzz**	710	106	4.2	2060
2800	3800	**96USK5PE 8 CAA**	or	**CVB**	or	**CVP**	**96UN 130Y 800 yyzz**	800	130	5.1	1620
3010	4080	**96USK5PE 9 CAA**	or	**CVB**	or	**CVP**	**96UN 130Y 900 yyzz**	900	130	5.1	1440
3360	4560	**96USK5PE 10 CAA**	or	**CVB**	or	**CVP**	**96UN 200Y 1000 yyzz**	1000	165	6.5	1300
3450	4680	**96USK6PE 5 CAA**	or	**CVB**	or	**CVP**	**96UN 29Y 500 yyzz**	500	82	3.2	2600
4445	6030	**96USK6PE 6 CAA**	or	**CVB**	or	**CVP**	**96UN 67Y 630 yyzz**	630	106	4.2	2060
5060	6860	**96USK6PE 7 CAA**	or	**CVB**	or	**CVP**	**96UN 67Y 710 yyzz**	710	106	4.2	2060
5750	7800	**96USK6PE 8 CAA**	or	**CVB**	or	**CVP**	**96UN 130Y 800 yyzz**	800	130	5.1	1620
6515	8840	**96USK6PE 9 CAA**	or	**CVB**	or	**CVP**	**96UN 130Y 900 yyzz**	900	130	5.1	1440
7285	9880	**96USK6PE 10 CAA**	or	**CVB**	or	**CVP**	**96UN 200Y 1000 yyzz**	1000	165	6.5	1300
8200	11120	**96USK6PE 11 CAA**	or	**CVB**	or	**CVP**	**96UN 200Y 1120 yyzz**	1120	165	6.5	1300

*Notes

1 Catalog number is type (96USK4PE) plus size number (Note 3) plus disc size and form letters (Note 4)
2 Hub and Disc is a separate catalog number to right
3 Size is diameter of disc.
4 Form/option Cxx = auto wear comp, open brake, no switches, xAx = no switches or options, xSx = add limit sw., xVx = 24 v dc solenoid valve, xxA = no other options, xxB = with mounting bracket, xxP = with mounting pedestal (see illustration on page 1-21).
5 For other pneumatic solenoid control voltages, refer to Company
6 Catalog number is: type (96UN), hub size (67Y), disc (note 7) plus bore (note 8).
7 Disc diam. in mm.
8 Letters "yy" defines bore size (see note 9) and "zz" defines keyway. Specify dimensions at time of order.
9 Max. hub diameter in mm and inches. Refer to GE for larger motor shaft sizes.

96USK-P Pneumatic Caliper Disc Brake For Industrial Applications

DIMENSIONS—96USK-P Brake (without mounting base or pedestal—see below)

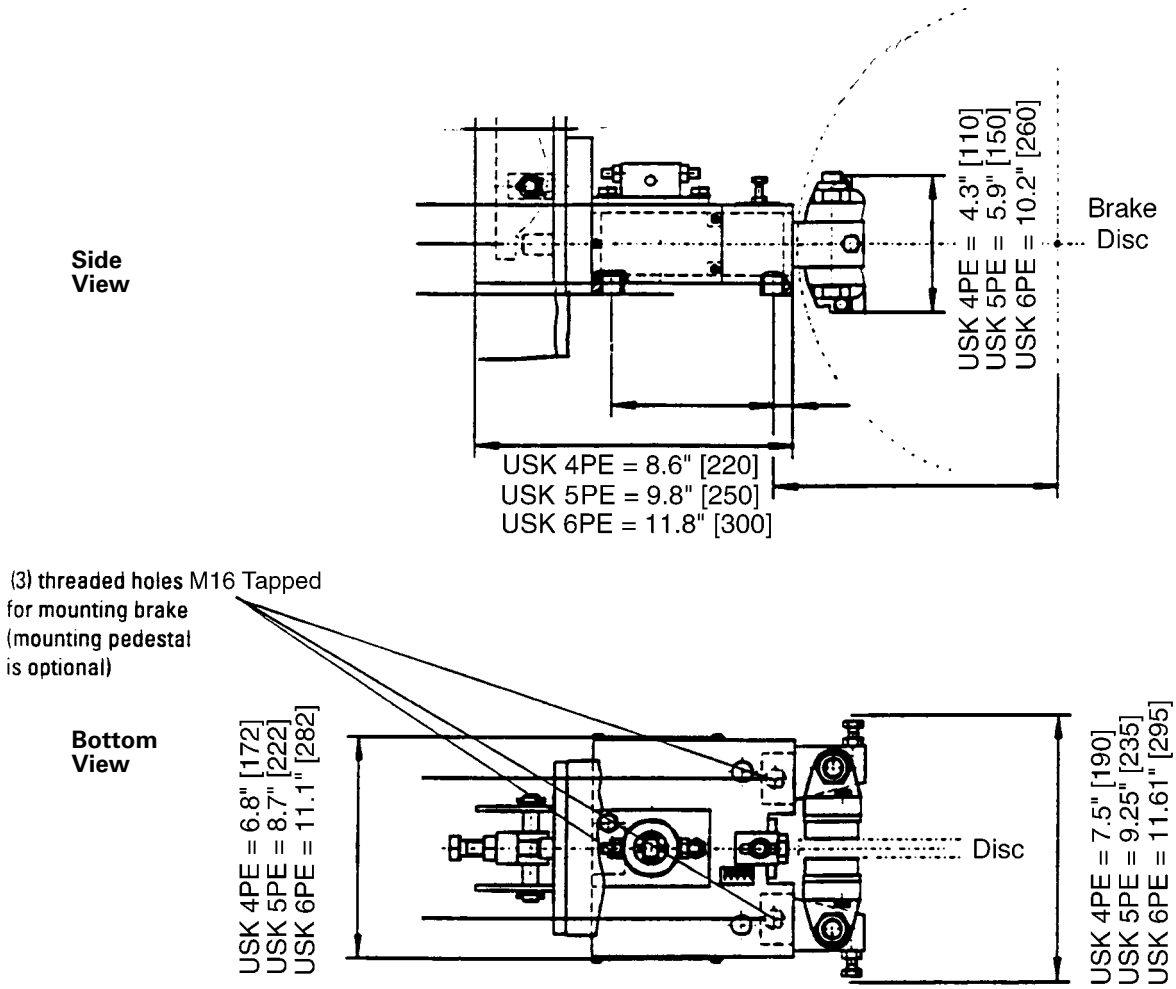

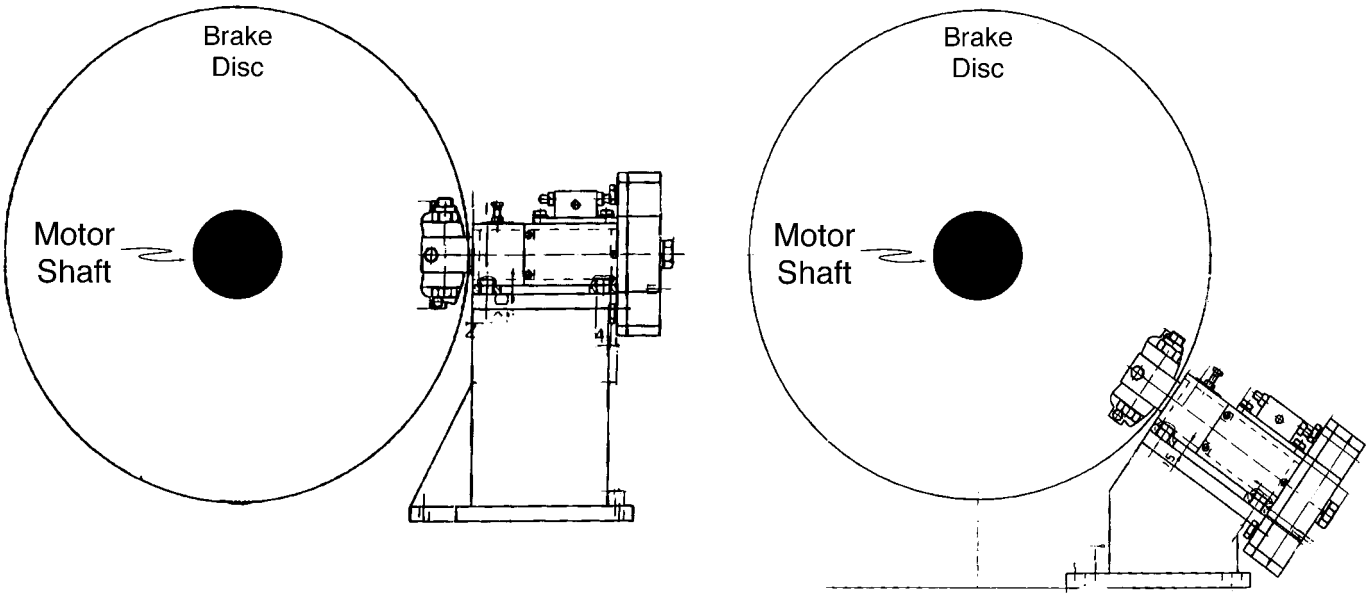

IC NUMBER INDEX

IC/DS Numbers‡	Description	Page
IC7483	Ac Rectifier Panel	1-3
IC9504	Thrustor	Refer to GE
IC95160863A	Ac Thrustor Plus Brake	1-10
IC95161164A	Ac Thrustor Plus Brake	1-10
IC95161465A	Ac Thrustor Plus Brake	1-10
IC95161966A	Ac Thrustor Plus Brake	1-10
IC9516161K	Dc Solenoid Brake	Refer to GE
IC9516460BB	Ac Solenoid Brake	1-11
IC9516461H	Ac Solenoid Brake	1-11
IC9516462U	Ac Solenoid Brake	1-11
IC9516463J	Ac Solenoid Brake	1-11
IC9516464V	Ac Solenoid Brake	1-11
1-11IC9516465R	Ac Solenoid Brake	1-11
IC9528A100, C100,D100, E100	8'' Dc Magnet Brake	1-3
IC9528A101, C101,D101, E101	10'' Dc Magnet Brake	1-3
IC9528A102, C102,D102, E102	13'' Dc Magnet Brake	1-3
IC9528A103, C103,D103, E103	16'' Dc Magnet Brake	1-3
IC9528A104, C104,D104, E104	19'' Dc Magnet Brake	1-3
IC9528A105, C105,D105, E105	23'' Dc Magnet Brake	1-3
IC9528A106	30'' Dc Magnet Brake	1-3

‡ IC and DS numbers are synonymous.

CATALOG NUMBER INDEX

Catalog Numbers	Description	Page
118B8880	8″ Wheel SB	1-7
118B8881	8″ Wheel TB	1-7
118B8882	10″ Wheel SB	1-7
118B8883	10″ Wheel TB	1-7
118B8884	13″ Wheel SB	1-7
118B8885	13″ Wheel TB	1-7
118B8886	16″ Wheel SB	1-7
118B8887	16″ Wheel TB	1-7
118B8888	19″ Wheel SB	1-7
118B8889	19″ Wheel TB	1-7
118B8890	23″ Wheel SB	1-7
118B8891	23″ Wheel TB	1-7
118B8902	13″ Wheel TB	1-7
118B8922	13″ Wheel SB	1-7
118B8926	13″ Wheel TB	1-7
119B1390	13″ Wheel SB	1-7
129B5606	8″ Wheel SB	1-7
129B5608	10″ Wheel TB	1-7
129B5631	10″ Wheel TB	1-7
129B9459	19″ Wheel SB	1-7
139B7141	8″ Wheel TB	1-7
139B7155	16″ Wheel SB	1-7
139B7182	16″ Wheel SB	1-7
139B8184	30″ Wheel TB	1-7
149B2888	16″ Wheel TB	1-7
157B2754	10″ Wheel SB	1-7
157B6814	23″ Wheel SB	1-7
157B6829	13″ Wheel SB	1-7
157B8694	30″ Wheel SB	1-7
158B2012	19″ Wheel SB	1-7
167A5656	10″ Wheel SB	1-7
167A8911	8″ Wheel SB	1-7
167A8980	16″ Wheel SB	1-7
167A9997	16″ Wheel SB	1-7
168A1705	23″ Wheel SB	1-7
171B3226	10″ Wheel SB	1-7
171B3247	13″ Wheel SB	1-7
171B3259	19″ Wheel SB	1-7
171B3268	8″ Wheel SB	1-7
171B3280	13″ Wheel SB	1-7
171B3285	13″ Wheel TB	1-7
171B3288	10″ Wheel SB	1-7
171B3424	19″ Wheel SB	1-7
171B3425	23″ Wheel SB	1-7
171B3426	13″ Wheel SB	1-7
171B3447	23″ Wheel TB	1-7
171B3448	23″ Wheel TB	1-7
171B3449	19″ Wheel TB	1-7
171B3450	13″ Wheel TB	1-7
171B3451	13″ Wheel TB	1-7
171B3452	13″ Wheel TB	1-7
171B3453	13″ Wheel TB	1-7
171B3611	16″ Wheel SB	1-7
174A6262	19″ Wheel SB	1-7
174A7348	19″ Wheel SB	1-7
174A7349	19″ Wheel SB	1-7
177B8721	19″ Wheel TB	1-7
177B8727	13″ Wheel SB	1-7
187B5620	19″ Wheel SB	1-7
233B333	3 7/32″ Wheel SB	1-15
273A2026	19″ Wheel TB	1-7
277A8176	19″ Wheel SB	1-7
277A8180	8″ Wheel SB	1-7
277A8181	8″ Wheel SB	1-7
277A8182	10″ Wheel SB	1-7
277A8183	10″ Wheel SB	1-7
277A8184	13″ Wheel SB	1-7
277A8185	13″ Wheel SB	1-7
277A8188	19″ Wheel SB	1-7
277A8189	16″ Wheel SB	1-7
277A8190	16″ Wheel SB	1-7
277A8191	23″ Wheel SB	1-7
277A8192	23″ Wheel SB	1-7
284A450	Series Resistor 102 Brake	1-3
284A451	Series Resistor 102 Brake	1-3
284A456	Series Resistor 104 Brake	1-3
284A457	Series Resistor 104 Brake	1-3
284A460	Series Resistor 100 Brake	1-3
284A461	Series Resistor 100 Brake	1-3
284A464	Series Resistor 103 Brake	1-3
284A465	Series Resistor 103 Brake	1-3
284A468	Series Resistor 101 Brake	1-3
284A470	Series Resistor 101 Brake	1-3
285A791	Series Resistor 105 Brake	1-3
285A792	Series Resistor 105 Brake	1-3
305A1263	10″ Wheel SB	1-7
305A1267	19″ Wheel TB	1-7
323A1056	Thrustor Mechanism	1-12
3860820	3 7/32″ Wheel SB	1-15
3860821	4 15/32″ Wheel SB	1-15
3860822	5 3/4″ Wheel SB	1-15
3860823	8″ Wheel SB	1-15
3860824	11″ Wheel SB	1-15
3860825	14″ Wheel SB	1-15
3869826	19″ Wheel SB	1-15
394B420	5 3/4″ Wheel SB	1-15
6960127	4 15/32″ Wheel SB	1-15
8077909	11″ Wheel SB	1-15
8205518	3 7/32″ Wheel SB	1-15
8205519	4 15/32″ Wheel SB	1-15
8205520	8″ Wheel SB	1-15
96USB	Thrustor Brake	1-22
96SBM	Solenoid Brake	1-18
96USK	Solenoid Brake	1-20
96UN	Disc and Hub	1-20