WHERE TO USE

IC9516 brakes are spring-set, electrically released brakes operated by solenoids in the smaller sizes and Thrustor Plus® mechanisms in the larger sizes. They provide reliable low-cost operation on varied applications throughout industry. They are used on cranes, bridges, turn-tables, conveyors, machine tools, elevators, printing presses, hoists, locks and dams, overhead doors, and deck machinery. GE IC9516 brakes, either Thrustor or solenoid operated, are spring-set, two-shoe brakes. They are electrically released by a solenoid in the smaller sizes and by a Thrustor mechanism in the larger ratings.

Easily adjustable braking torque, down to 50% rating, is incorporated in the sturdy, simple construction of these brakes.

High-inertia loads offer ideal applications for the Thrustor Plus-operated brake. Its ability to apply and remove braking pressure smoothly makes it highly desirable for application in cranes, hoists, and elevators.

Speed of operation of the Thrustor Plus mechanism—both setting and releasing—can be independently adjusted to enable stored energy of the load to be dissipated before brake pressure is applied.

FEATURES

1. Durable linkage isolates shock of solenoid from brake for longer life.
2. Only 3 simple adjustments:
   A. Shoe clearance
   B. Solenoid or Thrustor mechanism gap
   C. Brake torque
3. Long solenoid life is provided because spring is designed for low build-up characteristics.
4. To help protect and maintain full-load on solenoid, lever ratio is adjustable for required torque range.
5. Large diameter pins permit correct alignment and provide liberal bearing surfaces.
6. Non-asbestos linings.
7. Special non-scoring rivets securely hold easily replaceable lining.
8. Connections are better protected by conduit box.
9. Rapid cooling provided because shoes cover only half the wheel.
10. Sturdy, rigid base construction is provided for both type brakes.
11. Yoke pins near center line of wheel afford even lining wear.
12. Thrustor mechanism provides a cushion when releasing and setting the brake, thereby preventing stresses from being transmitted to the driven machinery during starts and stops.
13. Adjustable time-delay settings are provided on Thrustor plus brakes.

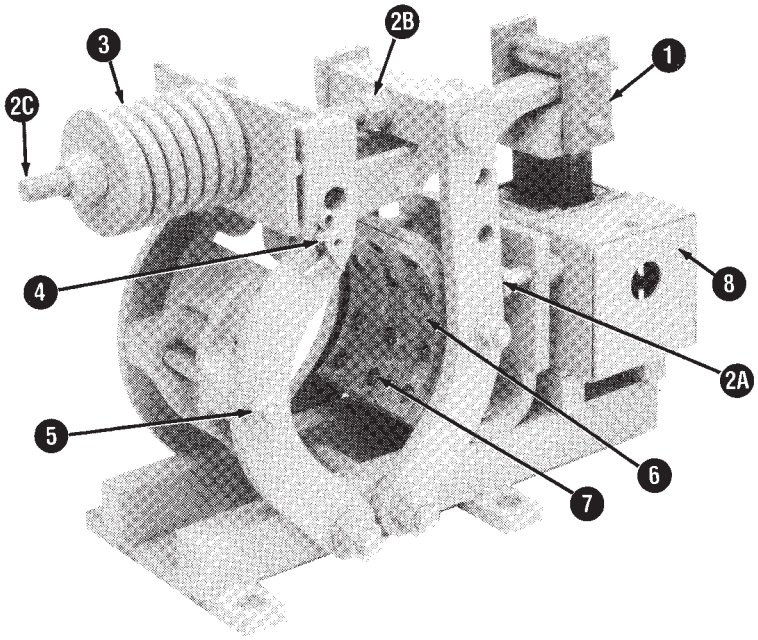

Fig. 16. IC9516 Solenoid Brake

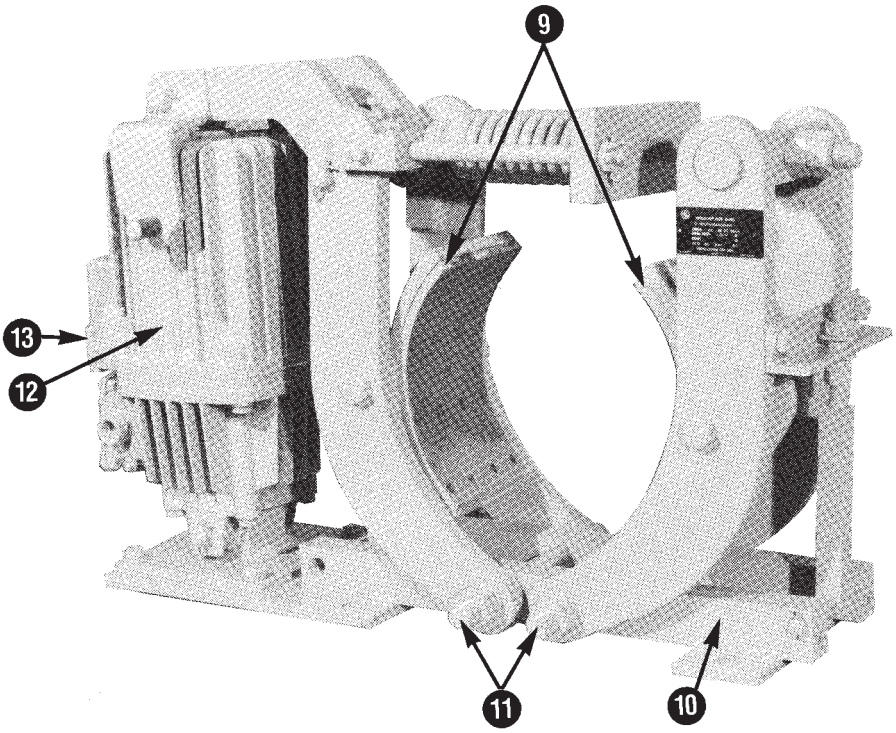

Fig. 17. IC9516 Thrustor Plus Brake

GE THRUSTOR PLUS DRUM BRAKES—125 to 1600 lb ft rated

EXAMPLE OF COMPLETE IC CATALOG NUMBER IS AS FOLLOWS:

IC9516 0863 A A230 D BA

- BA — FORM LETTER ACCESSORIES (SEE TABLE 8)
- D — ENCLOSURE DATA (SEE TABLE 8) A = OPEN, D = DRIPPROOF, W = WATERTIGHT
- A230 — GROUP NO. (THRUSTOR PLUS MOTOR VOLTAGE) (SEE TABLE 7)
- A — GROUP LETTER A = STANDARD – MAY BE USED WITH OPEN, DRIPPROOF AND WATERTIGHT BRAKES
  - L = SAME AS "A" EXCEPT HAS 2 LIMIT SWITCHES 1 FOR NORMAL SET AND 1 FOR NORMAL RELEASE
- 0863 — SIZE 0863 = 8" BRAKE, 1164 = 11" BRAKE, 1465 = 14" BRAKE, 1966 = 19" BRAKE
- IC9516 — BASIC CATALOG NO.

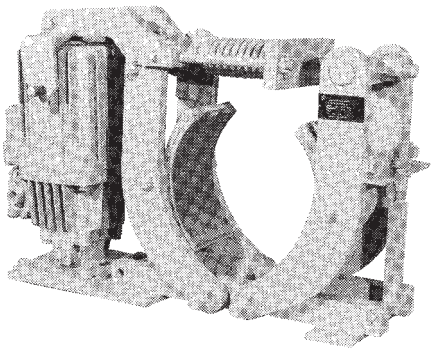

Fig. 18. IC9516 Thrustor Plus Brake

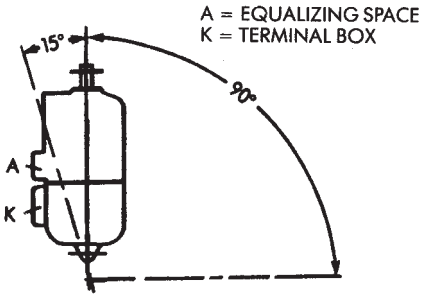

Fig. 19. Thrustors can be mounted vertically, at an angle and horizontally as shown above. Care must always be taken to ensure that the equalizing space "A" lies uppermost

TABLE 7—IC9516 Ac Drum Brakes

Wheel Diam Inches	Torque In Cont.	Rating Lb-Ft. 60 Min.	Open Brake Form** Non Corr Hdwe	Motor Voltage 3 Phase 230V	Motor Voltage 3 Phase 460V	Enclosure See Table 2 Below	Wheels Straight Bore	Wheels Tapered Bore
8	125	160	**IC95160863A**	A230	A460	---	See page 1-15	
11	325	400	**IC95161164A**	B230	B460	---		
14	600	800	**IC95161465A**	C230	C460	---		
19	1200	1600	**IC95161966A**	D230	D460	---		

** For Thrustor Plus Brakes with 2 limit switches (1 for normal set and 1 for normal release) use group "L" instead of "A". Example IC95160863L.

* Cat number and price do not include wheel. See **HOW TO ORDER**, page 1-11.

NOTE—Thrustor Plus operating temperature range is −25°C to +50°C.

TABLE 8—OPEN, DRIPPROOF ENCLOSURE OR WATERTIGHT ENCLOSURE, WITH MODIFICATIONS

Basic Cat. No.	Open No Modifications		Open w/Hand Release		Open w/Hand Release and Limit Switch		Dripproof Encl No Modifications		Dripproof Encl w/Hand Release		Dripproof Encl w/Hand Release and Limit Switch	
9516 Form	Left Hand	Right Hand	Left Hand	Right Hand	Left Hand	Right Hand	Left Hand	Right Hand	Left Hand	Right Hand	Left Hand	Right Hand
0863A	**AAA**	**AAB**	**ABA**	**ABB**	**ACA**	**ACB**	**DAA**	**DAB**	**DBA**	**DBB**	**DCA**	**DCB**
1164A	**AAA**	**AAB**	**ABA**	**ABB**	**ACA**	**ACB**	**DAA**	**DAB**	**DBA**	**DBB**	**DCA**	**DCB**
1465A	**AAA**	**AAB**	**ABA**	**ABB**	**ACA**	**ACB**	**DAA**	**DAB**	**DBA**	**DBB**	**DCA**	**DCB**
1966A	**AAA**	**AAB**	**ABA**	**ABB**	**ACA**	**ACB**	**DAA**	**DAB**	**DBA**	**DBB**	**DCA**	**DCB**

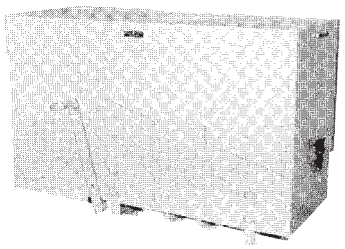

Fig. 20. IC9156 brake with GE Type 3 enclosure and optional hand release

TABLE 8A—MODIFICATIONS (cont.)

Basic Cat. No.	Watertight Encl ‡¶ No Modifications	Watertight Encl ‡¶ w/Hand Release	Watertight Encl ‡¶ w/Hand Release and Limit Switch	Watertight Encl ‡ and 1 Shaft Seal	Watertight Encl ‡ w/Hand Release and 1 Shaft Seal	Watertight Encl ‡ w/Hand Release, S Seal and Lm Sw
9516 Form	Suffix Letters	Suffix Letters	Suffix Letters	Suffix Letters	Suffix Letters	Suffix Letters
0863A	**WA#**	**WB#**	**WC#**	**WM#**	**WD#**	**WF#**
1164A	**WA#**	**WB#**	**WC#**	**WM#**	**WD#**	**WF#**
1465A	**WA#**	**WB#**	**WC#**	**WM#**	**WD#**	**WF#**
1966A	**WA#**	**WB#**	**WC#**	**WM#**	**WD#**	**WF#**

¶ End shield mated.

‡ Must specify left or right assembly and type of motor to be used with brake.

Third letter to be determined by GEDS.

For APPLICATION DATA, refer to page 1-12.

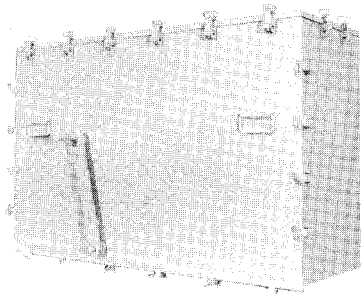

Fig. 21. IC9516 brake with GE Type 4 enclosure, and optional hand release

IC9516 SOLENOID DRUM BRAKES—10 lb ft to 600 lb ft ratings

TABLE 9—AC SOLENOID OPERATED BRAKES

Wheel Diam in Inches	Torque Rating In Lb.-Ft.		Brake Nomenclature (IC9516 & Voltage Suffix) EXAMPLE IC9516460BB002AC015					
	Con-tinuous	60 Min.	Open Brake With Corrosion Resistant Fittings	Brake w/Type 3 Enclosure & Corrosion Resistant Fittings	Voltage Suffix			
					115V	230V	460V	575V
3 7/32	10	15	**IC9516460BB002AA**		018	017	015	016
3 7/32	10	15		**IC9516460BB002AC**	018	017	015	016
4 15/32	25	35	**IC9516461H006AA**		024	009	017	023
4 15/32	25	35		**IC9516461H006AC**	024	009	017	023
5 3/4	50	75	**IC9516462U005AA**		024	009	019	023
5 3/4	50	75		**IC9516462U005AC**	024	009	019	023
8	125	160	**IC9516463J001AA**		017	018	016	013
8	125	160		**IC9516463J001AC**	017	018	016	013
11	325	400	**IC9516464V001AA**		N/A	017	015	014
11	325	400		**IC9516464V001AC**	N/A	017	015	014
14	600	600	**IC9516465R001AA**		N/A	011	009	012
14	600	600		**IC9516465R001AC**	N/A	011	009	012

HOW TO ORDER

Standard Ac Brake (Open)

Specify complete catalog number of standard ac solenoid- or Thrustor-operated brake from tables on page 1-10, 1-11. Complete catalog number consists of IC number, brake form number and suffix number.

EXAMPLE: IC95160863AA460 AAA

Brake Wheel

Furnish catalog number (see page 1-15) or dimensions per sketch Fig. 22.

REFERENCES:

Instructions
- Solenoid-operated.....GEH-641
- Thrustor-operated.....GEH-5833

Renewal Parts
- IC9516-460BB1 .....GEF-4320
- Brake shoes .....See below
- IC9516-461H, 462U, 463J, 464V, 465R.....GEF-4321
- IC9516 0863, 1164, 1465, 1966 .....GEF-8013

Obsolete Thrustor (IC9504) Operated Brakes

IC9516 Thrustor operated brakes that utilized IC9504 Thrustors are replaced by Thrustor Plus brakes (page 1-10). For replacement, provide complete IC9516 nameplate data from obsolete brake. (EX: IC9516464S001AA149).

Special and Replacement Wheels Ordering Information

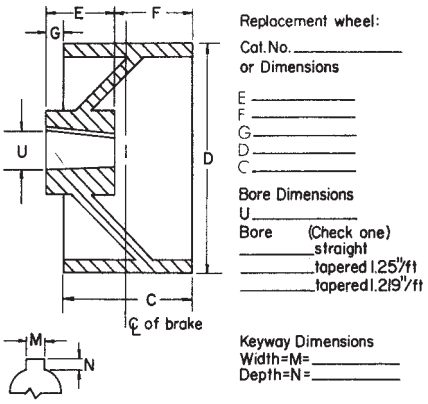

Fig. 22. If new application furnish motor outline and/or above dimensions

BRAKE SHOES AND LININGS

Brake Form	Brake shoes with Lining (Qty 2 per brake)	Lining only with Rivits (Qty 2 per brake)
IC9516-460 BB	2841029G4	NA
IC9516-461 H	2841055G4	NA
IC9516-462 U	2841048G18	NA
IC9516-463 J or 0863	2841048G6	21x465
IC9516-464 V or 1164	2841048G3	21x466
IC9516-465 R or 1465	2841066G2	21x467
IC9516-1966	2841066G1	21x468

Application Data

General

SELECTION OF RATINGS

For normal holding applications select a brake that will provide a torque equal to the motor full-load torque. If the motor full-load torque is not known, determine it from the following formula:

$$\text{Torque in pound feet} = \frac{5250 \times \text{motor hp}}{\text{motor full load rpm}}$$

For duty cycle and stopping applications the heat dissipating capacity of the brake may be the determining factor in selection.

TORQUE RATING

Torque ratings are maximum values of torque the brake is designed to provide. Torque can be adjusted downward to 50 percent of rating to suit characteristics of load.

SHUNT-WOUND BRAKES

All ac solenoid and Thrustor® Plus brakes are used as shunt devices, being energized simultaneously with the motor or by a separate brake contactor. Dc solenoid brakes are furnished for shunt operation only.

MOUNTING POSITION

Solenoid-operated brakes can be mounted in the following positions: (1) horizontal (floor or bracket mounting), (2) vertical (base against wall) with horizontal shaft, (brake must be mounted with solenoid below the wheel), or (3) ceiling mounted (base against ceiling). No additional parts are required.

Thrustor-operated brakes can be mounted horizontal (on floor) or tilted. See Fig. 19 page 1-10 for operating range.

OPEN BRAKES

Specify open brakes for indoor locations subject to normal dust and no more than light indirect splashing.

CORROSION-RESISTANT FITTINGS

All brakes include corrosion resistant fittings for operation outdoors or indoors in the presence of corrosive atmospheres or extreme moisture conditions, whether brake is open or enclosed.

CONDUIT BOX

Provision for terminating conduit is furnished on all forms of the IC9516 brake as standard equipment.

Thrustor Operated

GE TYPE 3—WEATHER-RESISTANT BRAKES

Specify GE Type 3 weather-resistant brakes for outdoor locations subject to occasional rain, sleet or snow. Brakes include corrosion-resistant fittings for most effective indoor or outdoor protection. See page 1-14 for dimensions.

GE TYPE 4-WATERTIGHT/DUST TIGHT FOR THRUSTOR PLUS BRAKES

Specify GE Type 4 watertight and dust-tight brakes for outdoor locations subject to splashing water, seeping water, rain, snow, falling or hose-directed water or severe external condensation. The GE Type 4 enclosure is also suitable for severe dust and dirt environments. The brake mechanism is protected by a complete enclosure which includes a gasketed surface for bolting to the motor-end shield. The motor-end shield must be drilled and tapped for screws to hold the enclosure to motor and form a water-tight seal. See page 1-14 for dimensions.

Normally the standard mounting of a brake is with the Thrustor at the left facing the motor from the brake end (left hand); hence the standard enclosure is made to permit such mounting. Since the hole for the motor shaft is not in the center of the enclosure, it is important to state on the order if enclosure is to be used on a brake with the Thrustor on the right.

Motors to be used with enclosed brakes will usually have to be ordered with a longer shaft extension than that required for an open brake.

ENCLOSURE ORIENTATION

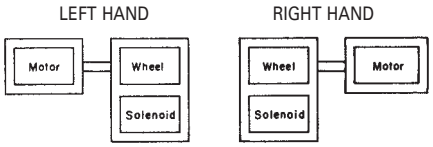

Fig. 25.

SHAFT SEALS—FOR USE WITH GE TYPE 4 ENCLOSURES

When using enclosed brakes with totally enclosed fan-cooled motors, to which the brake enclosure cannot be bolted, or if the brake is used on a shaft other than a motor shaft, it is necessary to specify a shaft seal for the brake. Two shaft seals must be specified if the shaft projects completely through the brake enclosure.

HAND RELEASE

Hand release permits the Thrustor operated brake to be released without energizing the brake. This can be done from the outside of the brake on enclosed forms.

ELECTRICAL INTERLOCK—HAND RELEASE

The interlocking limit switch for hand release is for use in making the associated control inoperative while the Thrustor operated brake is in the hand-released position. The interlock provides two circuits—one normally open and one normally closed.

ELECTRICAL INTERLOCK—NORMAL RELEASE AND NORMAL SET

These interlocks include a two-circuit limit switch (1NO, 1NC) operated mechanically when the Thrustor mechanism reaches the end of the brake-release stroke.

TIME-DELAY SETTING

Independent adjustable speed of operation for setting and releasing is furnished as a standard feature on all Thrustor brakes.

THRUSTOR OIL

Oil for Thrustor brakes is intended for ambient temperatures of −25 C to +50 C (spec Shell Oil Tellus C1O).

MOTOR CURRENTS			
IC9516 Form	Thrustor Mechanism	Volts	Current (Amps)
0863	323A1056A230	230	0.95
	323A1056A460	460	0.49
1164	323A1056B230	230	0.94
	323A1056B460	460	0.47
1465	323A1056C230	230	2.30
	323A1056C460	460	1.40
1966	323A1056D230	230	2.60
	323A1056D460	460	1.30

Motor Voltage ± 5 Percent

Solenoid Operated

GE TYPE 3—WEATHER-RESISTANT BRAKES

Specify GE Type 3 weather-resistant brakes for outdoor locations subject to occasional rain, sleet or snow. Brakes include corrosion-resistant fittings for most effective outdoor or indoor protection. See page 1-14 for dimensions.

SOLENOIDS

Refer to applicable renewal parts bulletin for solenoid and operating coil numbers for replacement purposes.

Ac SOLENOID COIL BURDEN		
IC9516 Form	Inrush Volt/amp	Holding Volt/amp
460	1570	100
461	5450	390
462	5450	390
463	12600	715
464	31200	1760
465	31200	1760

Enclosures—IC9516 (Dimensions in inches for estimating only)

DIMENSIONS (For Estimating Only)

SOLENOID OPERATED

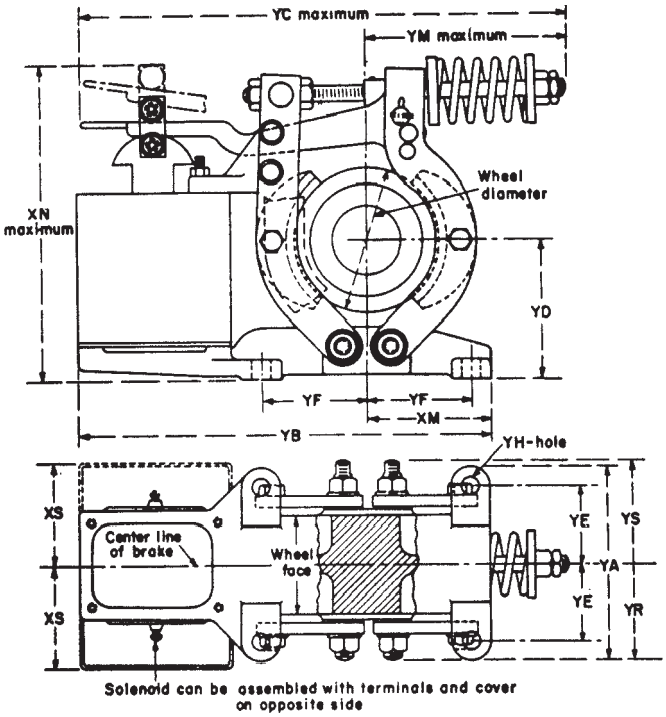

Fig. 26.

THRUSTOR® OPERATED

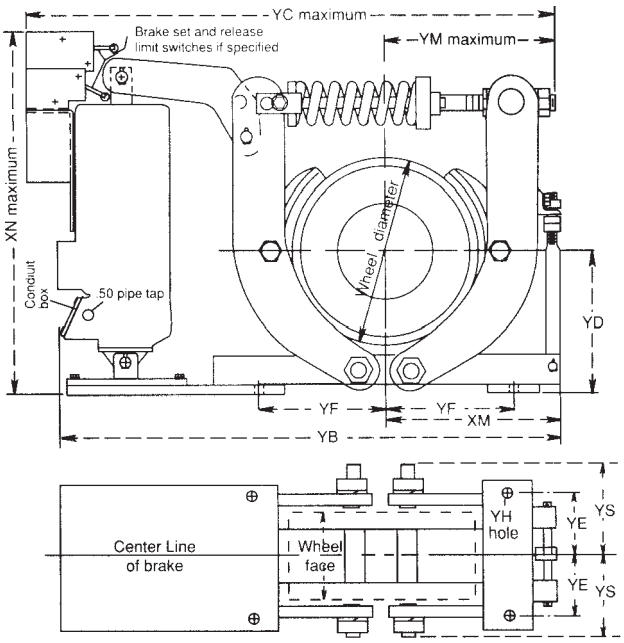

Fig. 27.

SOLENOID OPERATED

IC9516 Brake Form	Weight of Brake Incl Wheel, in Lb	Dimensions in Inches														
		Brake Wheel		XM	XN	XS	YA	YB	YC	YD	YE	YF	YH	YM	YR	YS
		Dia	Width (Face)													
161	72	4 15/32	3	3 7/8	9 11/16	4 7/16	6	13 9/16	15 13/16	4 1/4	2 3/8	3 1/4	9/16	6 1/8	3	3 5/16
460	17	3 7/32	1 3/4	2 5/8	7 5/16	2 7/8	3 1/4	9 1/8	10	3 1/8	1 1/4	2 1/4	11/32	4 1/4	1 11/16	1 13/16
461	43	4 15/32	3	3 7/8	9 11/16	3 5/32	6	12 13/16	14 1/4	4 1/4	2 3/8	3 1/4	9/16	6 7/16	2 15/16	3 5/16
462	72	5 3/4	3	4 3/4	12 3/8	3 5/32	6	16 1/2	17 1/2	5 1/4	2 3/8	4	9/16	6 15/32	3 3/16	3 5/8
463	135	8	3 1/2	6 3/8	13 1/4	3 7/8	7	21 1/4	21 5/8	6 1/8	2 5/8	5 3/4	11/16	7	3 5/8	4
464	300	11	5	8 3/8	18 3/4	4 13/16	8 3/4	28 7/16	32	8 1/4	3 1/2	7 1/2	11/16	11 3/4	4 3/8	5 1/8
465	423	14	6 1/2	10 3/4	22	5 11/16	11 1/2	33 7/16	36	10 1/2	4 1/2	9 1/2	13/16	13	5 3/4	6 9/16

THRUSTOR OPERATED

IC9516 Brake Form	Weight of Brake Incl Wheel in Lb	Dimensions in Inches												
		Brake Wheel		XM	XN	YB	YC	YD	YE	YF	YH	YM	YR	YS
		Dia	Width (Face)											
0863	101	8	3 1/2	7 1/8	15 5/8	19	24 13/16	6 1/8	2 5/8	5 3/4	21/32	9 1/4	3 5/8	4
1164	315	11	5	10 1/4	23 1/8	29 1/4	34	8 1/4	3 1/2	7 1/2	21/32	11 3/4	4 3/4	5 1/4
1465	470	14	6 1/2	12 1/8	24 5/8	35	38 5/8	10 1/2	4 1/4	9 1/2	25/32	13	5 15/16	6 9/16
1966	730	19	8	14 7/8	30	43	44 7/8	12 1/2	5 3/8	11 7/8	15/16	16	7 5/16	8

Enclosures—IC9516 (Dimensions in inches for estimating only)

DRIP COVER—GE Type 3 Solenoid Brakes

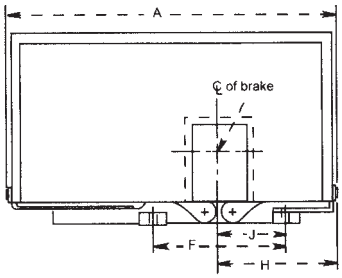

Side View

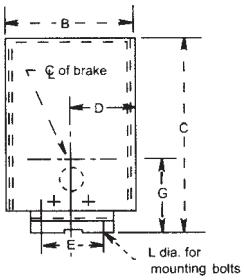

End View

IC516 Solenoid	Drip Cover—Type 3									
	A	B	C	D	E	F	G	H	J	L
460	13.63	6.00	8.38	3.00	2.50	4.50	3.13	5.38	2.25	11/32
461	21.00	7.00	11.63	3.50	4.75	6.50	4.25	7.63	3.25	9/16
462	25.00	8.75	14.13	4.38	4.75	8.00	5.25	8.50	4.00	9/16
463	29.25	11.00	18.13	5.50	5.25	11.50	6.13	10.63	5.75	21/32
464	37.25	14.25	21.88	7.13	7.00	15.00	8.25	13.63	7.50	11/16
465	40.00	12.75	22.50	6.25	9.00	19.00	10.50	14.25	9.50	13/16

DRIP COVER—GE Type 3 Thrustor Plus Brakes

Brakes may be furnished with limit switch for manual released or electrically operated or both when ordered.

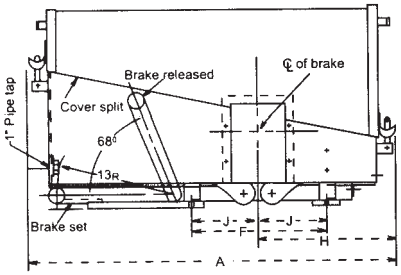

Side View

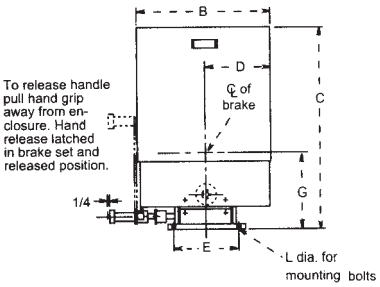

End View

IC9516 Thrustor Plus	Drip Cover—Type 3									
	A	B	C	D	E	F	G	H	J	L
0863	31.25	10.75	18.13	5.38	5.25	11.50	6.13	10.63	5.75	21/32
1164	39.50	15.00	24.25	7.50	7.00	15.00	8.25	14.75	7.50	21/32
1465	45.75	16.00	28.38	8.00	9.00	19.00	10.50	16.38	9.50	25/32
1966	55.75	19.00	33.25	9.50	10.75	23.75	12.50	20.00	11.88	15/16

WATERTIGHT—GE Type 4 Thrustor Plus & Dc Magnet Brakes

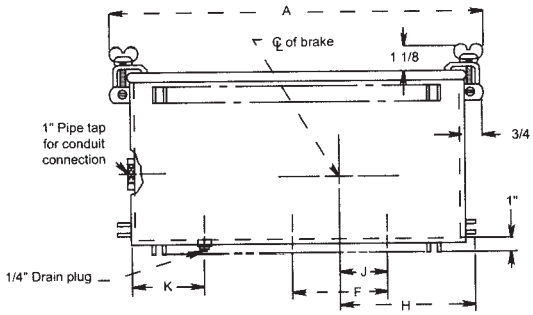

Side View

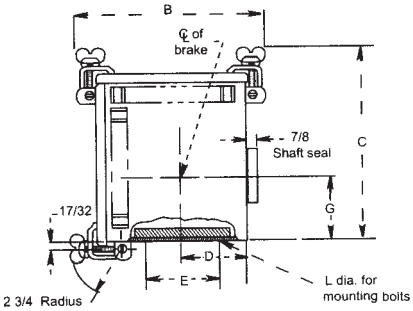

End View

IC9516 Thrustor Plus	Watertight Enclosures—Type 4										
	A	B	C	D	E	F	G	H	J	K	L
0863	31.00	14.00	21.13	5.13	5.25	11.50	6.25	11.13	5.75	3.00	21/32
1164	40.00	16.00	26.13	6.88	7.00	15.00	8.38	14.13	7.50	3.00	21/32
1465	45.00	18.00	29.13	7.38	9.00	19.00	10.63	15.38	9.50	3.00	25/32
1966	53.00	20.00	36.13	8.88	10.75	23.75	12.63	19.13	11.88	3.00	15/16

IC9528 DC Magnet	Watertight Enclosures—Type 4										
	A	B	C	D	E	F	G	H	J	K	L
100	32.00	14.00	19.13	5.38	5.75	6.50	7.13	10.13	3.25	3.00	11/16
101	37.00	15.00	21.13	6.13	6.25	8.00	8.50	12.13	4.00	3.00	11/16
102	42.00	17.00	26.13	7.13	9.00	11.50	10.00	14.38	5.75	3.00	13/16
103	51.00	20.00	29.13	8.88	10.75	15.00	12.25	8.13	7.50	3.00	1 1/16
104	58.00	23.00	34.13	10.13	13.00	18.50	13.38	20.13	9.25	3.00	1 1/16
105	66.00	29.00	37.13	12.00	16.00	23.50	16.00	25.75	11.75	3.00	1 5/16

Data subject to change without notice

Standard Brake Wheels—IC9516

DIMENSIONS (For Estimating Only)

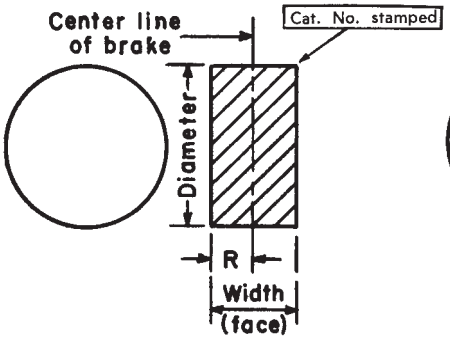

Fig. 28.

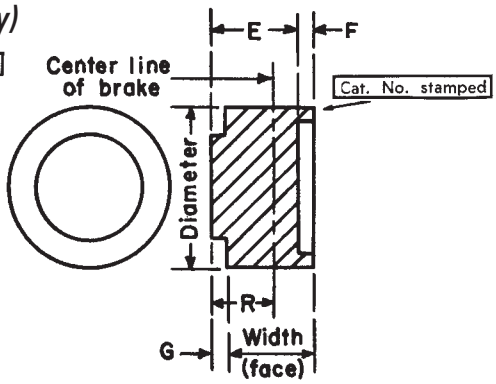

Fig. 29.

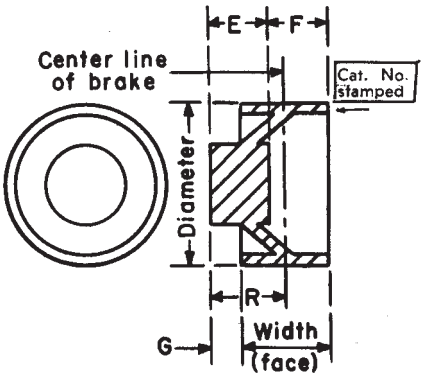

Fig. 30.

STANDARD BRAKE WHEELS WITH BLANK HUBS*

IC9516 Brake Form	Cat. No. Wheel without Bore and Keyway	Fig.	Approximate Wheel Dimensions in Inches							WK² Lb-Ft²	Weight in Lb
			Diameter	Width (Face)	E	F	G	R	Max Permissible Diameter of Straight Bore		
460	3860820XXPX	28	3 7/32	1 3/4	. . .	. . .	. . .	7/8	2	.037	3.0
161, 461	3860821XXPX	28	4 15/32	3	. . .	. . .	. . .	1 1/2	2 1/2	.237	10
161, 461	6960127XXPX	29	4 15/32	3	2 5/8	1	5/8	2 1/8	2	.237	10
462	3860822XXPX	29	5 3/4	3	3	3/4	3/4	2 1/4	2 1/2	.37	14
0863, 463	3860823XXPX	30	8	3 1/2	3 3/4	1/2	3/4	2 1/2	2 1/2	1.4	30
1164, 464	3860824XXPX	30	11	5	5	1 3/4	1 3/4	4 1/4	3 1/2	5.9	70
1164, 464	8077909XXPX	30	11	5	4	2 3/4	1 3/4	4 1/4	3	5.9	70
1465, 465	3860825XXPX	30	14	6 1/2	6	2	1 1/2	4 3/4	4 1/4	17.5	96
1966	3860826XXPX	30	19	8	6	4	2	6	5	62.0	220

*Blank hub brake wheels should be balanced, by customer, after boring prior to mounting on motor shaft.

NOMENCLATURE FOR BORE AND KEYWAY WHICH CAN BE FURNISHED ON ABOVE WHEELS

Add Bore Suffix to Blank Wheel Cat. No. ‡				Add Keyway Suffix to Blank Wheel Cat. No. and Bore Suffix‡					
Bore Dia. in Inches†	Suffix	Bore Dia. in Inches†	Suffix	Key Dimensions		Keyway Suffix	Keyway Dimensions		Keyway Suffix
				Width	Depth		Width	Depth	
1/2	YC	1 7/8	FF	3/16	3/32	P2	1/2	1/4	7
3/4	YG	2 1/8	HH	1/4	1/8	P3	5/8	5/16	9
7/8	YJ	2 3/8	KK	5/16	5/32	P4	3/4	3/8	10
1	YL	2 3/4	PP	3/8	3/16	P5	1	1/2	12
1 1/8	YP	3	SS						
1 1/4	YS	3 1/2	AB						
1 3/8	YV	3 3/4	AD						
1 1/2	AA	4	AF						
1 5/8	CC	4 1/4	AG						
1 3/4	EE	4 1/2	AH						

†Tolerances: Up to 3 inches (±0.0005); 3 inches and over (+ 0.000, −0.001).
‡EXAMPLE: 3860820YCP2 = 3 7/32-inch wheel with 1 7/8-inch bore and 3/16 × 3/32-inch keyway.

WHEELS WITH STRAIGHT BORE AND KEYWAY

IC9516 Brake Form	Wheel Catalog Number	Fig.	Approximate Wheel Dimensions in Inches								
			Diameter	Width (Face)	E	F	G	R	Bore	Keyway	
										Width	Depth
460	8205518P12	29	3 7/32	1 3/4	1 1/2	7/8	5/8	1 1/2	3/4	3/16	3/32
460	8205518P20	29	3 7/32	1 3/4	1 3/8	7/8	1/2	1 3/8	7/8	3/16	3/32
160, 460	233B333P2	29	3 7/32	1 3/4	2	3/8	5/8	1 1/2	7/8	3/16	3/32
161, 461	8205519P16	29	4 15/32	3	2 1/4	1 1/4	1/2	2	1 1/8	1/4	1/8
161, 461	8205519P17	29	4 15/32	3	2 15/16	1/8	1/16	1 9/16	1 1/4	1/4	1/8
161, 461	8205519P29	29	4 15/32	3	2	1 1/2	1/2	2	7/8	3/16	3/32
161, 461	8205519P37	29	4 15/32	3	1 3/4	1 1/4	. . .	1 1/2	1 1/8	1/4	1/8
161, 461	8205519P40	29	4 15/32	3	2 1/8	7/8	. . .	1 1/2	1 3/8	5/16	5/32
462	394B420P10	29	5 3/4	3	2 3/4	1 3/4	1 1/2	3	1 3/8	5/16	5/32
462	394B420P11	29	5 3/4	3	2 1/2	1/2	. . .	1 1/2	1 5/8	3/8	3/16
0863, 463	8205520P20	29	8	3 1/2	3	1 3/4	1 1/4	3	1 5/8	3/8	3/16

Data subject to change without notice

IC NUMBER INDEX

IC/DS Numbers‡	Description	Page
IC7483	Ac Rectifier Panel	1-3
IC9504	Thrustor	Refer to GE
IC95160863A	Ac Thrustor Plus Brake	1-10
IC95161164A	Ac Thrustor Plus Brake	1-10
IC95161465A	Ac Thrustor Plus Brake	1-10
IC95161966A	Ac Thrustor Plus Brake	1-10
IC9516161K	Dc Solenoid Brake	Refer to GE
IC9516460BB	Ac Solenoid Brake	1-11
IC9516461H	Ac Solenoid Brake	1-11
IC9516462U	Ac Solenoid Brake	1-11
IC9516463J	Ac Solenoid Brake	1-11
IC9516464V	Ac Solenoid Brake	1-11
1-11IC9516465R	Ac Solenoid Brake	1-11
IC9528A100, C100,D100, E100	8'' Dc Magnet Brake	1-3
IC9528A101, C101,D101, E101	10'' Dc Magnet Brake	1-3
IC9528A102, C102,D102, E102	13'' Dc Magnet Brake	1-3
IC9528A103, C103,D103, E103	16'' Dc Magnet Brake	1-3
IC9528A104, C104,D104, E104	19'' Dc Magnet Brake	1-3
IC9528A105, C105,D105, E105	23'' Dc Magnet Brake	1-3
IC9528A106	30'' Dc Magnet Brake	1-3

‡ IC and DS numbers are synonymous.

CATALOG NUMBER INDEX

Catalog Numbers	Description	Page
118B8880	8″ Wheel SB	1-7
118B8881	8″ Wheel TB	1-7
118B8882	10″ Wheel SB	1-7
118B8883	10″ Wheel TB	1-7
118B8884	13″ Wheel SB	1-7
118B8885	13″ Wheel TB	1-7
118B8886	16″ Wheel SB	1-7
118B8887	16″ Wheel TB	1-7
118B8888	19″ Wheel SB	1-7
118B8889	19″ Wheel TB	1-7
118B8890	23″ Wheel SB	1-7
118B8891	23″ Wheel TB	1-7
118B8902	13″ Wheel TB	1-7
118B8922	13″ Wheel SB	1-7
118B8926	13″ Wheel TB	1-7
119B1390	13″ Wheel SB	1-7
129B5606	8″ Wheel SB	1-7
129B5608	10″ Wheel TB	1-7
129B5631	10″ Wheel TB	1-7
129B9459	19″ Wheel SB	1-7
139B7141	8″ Wheel TB	1-7
139B7155	16″ Wheel SB	1-7
139B7182	16″ Wheel SB	1-7
139B8184	30″ Wheel TB	1-7
149B2888	16″ Wheel TB	1-7
157B2754	10″ Wheel SB	1-7
157B6814	23″ Wheel SB	1-7
157B6829	13″ Wheel SB	1-7
157B8694	30″ Wheel SB	1-7
158B2012	19″ Wheel SB	1-7
167A5656	10″ Wheel SB	1-7
167A8911	8″ Wheel SB	1-7
167A8980	16″ Wheel SB	1-7
167A9997	16″ Wheel SB	1-7
168A1705	23″ Wheel SB	1-7
171B3226	10″ Wheel SB	1-7
171B3247	13″ Wheel SB	1-7
171B3259	19″ Wheel SB	1-7
171B3268	8″ Wheel SB	1-7
171B3280	13″ Wheel SB	1-7
171B3285	13″ Wheel TB	1-7
171B3288	10″ Wheel SB	1-7
171B3424	19″ Wheel SB	1-7
171B3425	23″ Wheel SB	1-7
171B3426	13″ Wheel SB	1-7
171B3447	23″ Wheel TB	1-7
171B3448	23″ Wheel TB	1-7
171B3449	19″ Wheel TB	1-7
171B3450	13″ Wheel TB	1-7
171B3451	13″ Wheel TB	1-7
171B3452	13″ Wheel TB	1-7
171B3453	13″ Wheel TB	1-7
171B3611	16″ Wheel SB	1-7
174A6262	19″ Wheel SB	1-7
174A7348	19″ Wheel SB	1-7
174A7349	19″ Wheel SB	1-7
177B8721	19″ Wheel TB	1-7
177B8727	13″ Wheel SB	1-7
187B5620	19″ Wheel SB	1-7
233B333	3 7/32″ Wheel SB	1-15
273A2026	19″ Wheel TB	1-7
277A8176	19″ Wheel SB	1-7
277A8180	8″ Wheel SB	1-7
277A8181	8″ Wheel SB	1-7
277A8182	10″ Wheel SB	1-7
277A8183	10″ Wheel SB	1-7
277A8184	13″ Wheel SB	1-7
277A8185	13″ Wheel SB	1-7
277A8188	19″ Wheel SB	1-7
277A8189	16″ Wheel SB	1-7
277A8190	16″ Wheel SB	1-7
277A8191	23″ Wheel SB	1-7
277A8192	23″ Wheel SB	1-7
284A450	Series Resistor 102 Brake	1-3
284A451	Series Resistor 102 Brake	1-3
284A456	Series Resistor 104 Brake	1-3
284A457	Series Resistor 104 Brake	1-3
284A460	Series Resistor 100 Brake	1-3
284A461	Series Resistor 100 Brake	1-3
284A464	Series Resistor 103 Brake	1-3
284A465	Series Resistor 103 Brake	1-3
284A468	Series Resistor 101 Brake	1-3
284A470	Series Resistor 101 Brake	1-3
285A791	Series Resistor 105 Brake	1-3
285A792	Series Resistor 105 Brake	1-3
305A1263	10″ Wheel SB	1-7
305A1267	19″ Wheel TB	1-7
323A1056	Thrustor Mechanism	1-12
3860820	3 7/32″ Wheel SB	1-15
3860821	4 15/32″ Wheel SB	1-15
3860822	5 3/4″ Wheel SB	1-15
3860823	8″ Wheel SB	1-15
3860824	11″ Wheel SB	1-15
3860825	14″ Wheel SB	1-15
3869826	19″ Wheel SB	1-15
394B420	5 3/4″ Wheel SB	1-15
6960127	4 15/32″ Wheel SB	1-15
8077909	11″ Wheel SB	1-15
8205518	3 7/32″ Wheel SB	1-15
8205519	4 15/32″ Wheel SB	1-15
8205520	8″ Wheel SB	1-15
96USB	Thrustor Brake	1-22
96SBM	Solenoid Brake	1-18
96USK	Solenoid Brake	1-20
96UN	Disc and Hub	1-20